AIRTECHNIC
www.airtechnic.gr
Air-Conditioning & Ventilation Components & Systems

TUBO
the advanced vacuum system.

RESIDENTIAL TECHNICAL MANUAL

DT3

INDEX

99 TUBÒ SYSTEM DESIGN

102 TUBÒ VACUUM SYSTEM PREPARATION

109 TUBÒ SYSTEM ELECTRICAL CONNECTION

115 VACUUM SOCKET INSTALLATION

118 CENTRAL POWER UNIT SELECTION

120 INSTALLATION OF THE SINGLE-PHASE CENTRAL POWER UNIT

123 QB CENTRAL POWER UNIT SELECTION

124 INSTALLATION OF THE QB CENTRAL POWER UNIT

127 WIRELESS KIT

127 BRAVO POWER UNIT

128 KOMPATTA KT

130 TUBÒ VACUUM SYSTEM INSPECTION

131 PERFETTO TPA LINE TECHNICAL SPECIFICATIONS

132 LIST OF MATERIAL FOR INSTALLING THE CENTRALIZED VACUUM SYSTEM

TUBÒ VACUUM SYSTEM DESIGN

POSITIONING OF THE VACUUM SOCKETS

The correct positioning of the vacuum sockets makes cleaning operations easier for the user and makes it possible to reach all areas of the building, also reducing system costs.

The main parameter for positioning the sockets is the length of the flexible hose; in the residential sector a 7 m or a 9m hose is recommended.

MAIN CRITERIA FOR POSITIONING THE VACUUM SOCKETS

1 - position the vacuum socket near to the doors to prevent them from being covered by furnishings.

2 - position the vacuum socket at the bottom of stairs

3 - assess the entire area of the building that must be reached by the flexible hose, including balconies, store-rooms, outdoor stairs, porch, etc.).

a - Dynamic Control Display (CMT800)

or REMOTE panel kit (CM8890)

b - Vacuum socket

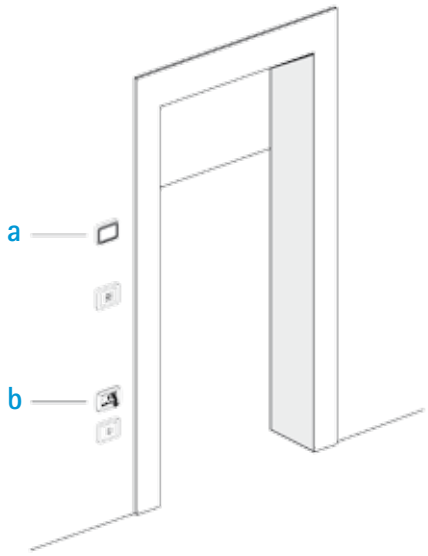

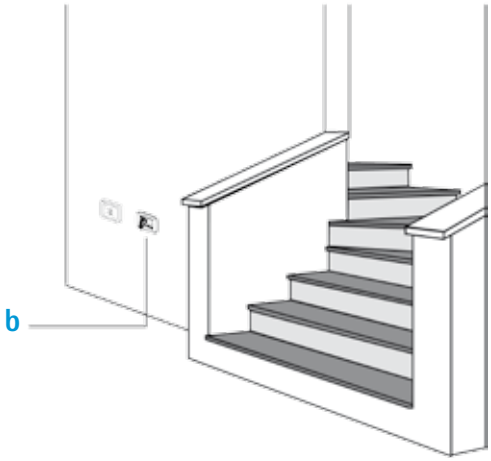

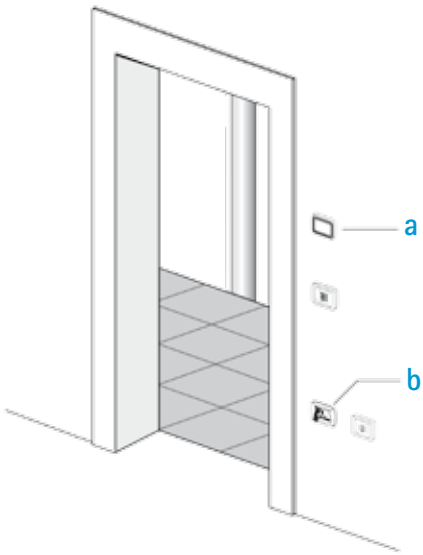

HOW TO CALCULATE THE NUMBER OF VACUUM SOCKETS - RESIDENTIAL SECTOR

Proceed as follows to correctly position the vacuum sockets.

ANALYTICAL METHOD

REQUIRED TOOLS

1 - map to scale
2 - ruler and pencil
3 - compass

HOW TO PROCEED

1
Remember that the length of the tube is 7 or 9 m. therefore consider the presence of future furnishing that could obstruct them when distributing the sockets.

2
Use the compass and building map. According to the drawing scale ratio, set the opening of the compass to a measurement of 1 m. less than the length of the flexible hose.

3
Position the first socket at the bottom of the stairs (see point **p** on the GROUND FLOOR).

4
Trace a circumference on the drawing, placing the centre at the point where the socket will be installed, drawing the operating range of the socket itself.

5
Position the subsequent sockets, considering the operating range of the first socket and a limited overlapping of the operating ranges as a safety margin.

6
Use a rule to check that the positioning is sufficient in order to cover all rooms (very important phase).

7
Position the central power unit in the garage or in an adequate equipment room.

SYNTHETIC METHOD

The formula below can be used to quickly calculate an approximate number of vacuum sockets using the total usable surface:

7 m. FLEXIBLE HOSE

$$\text{n° of vacuum sockets} = \frac{\text{total surface}}{30\text{m}^2}$$

9 m. FLEXIBLE HOSE

$$\text{n° of vacuum sockets} = \frac{\text{total surface}}{50\text{m}^2}$$

GROUND FLOOR

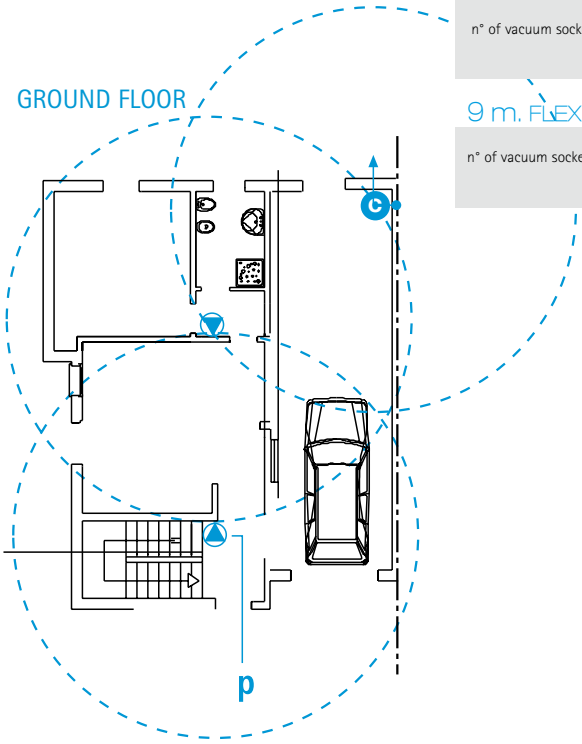

FIRST FLOOR

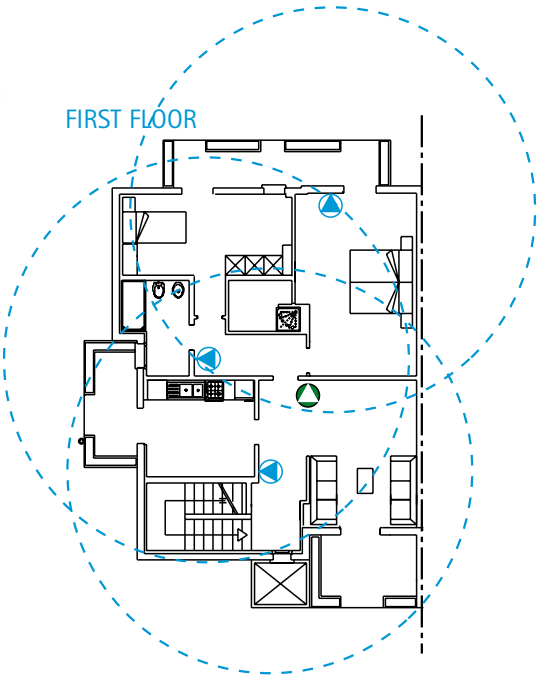

Vacuum socket

Central power unit with built-in socket

Dynamic Control Display or REMOTE panel kit

p Positioning the first socket

HOW TO CALCULATE THE NUMBER OF VACUUM SOCKETS - TERZIARY SECTOR

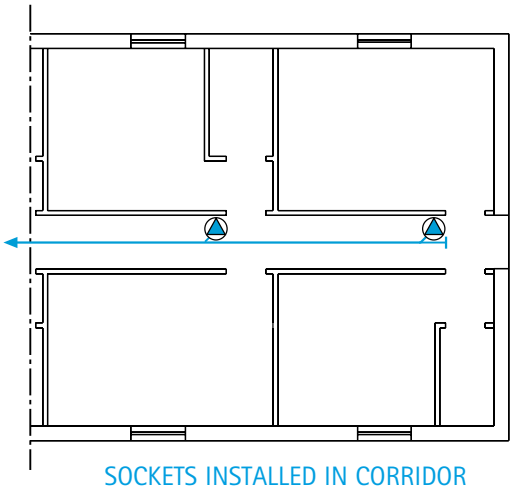

SOCKETS INSTALLED IN CORRIDOR

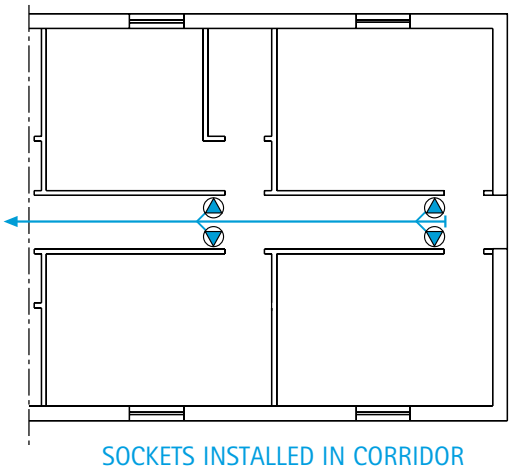

SOCKETS INSTALLED IN CORRIDOR

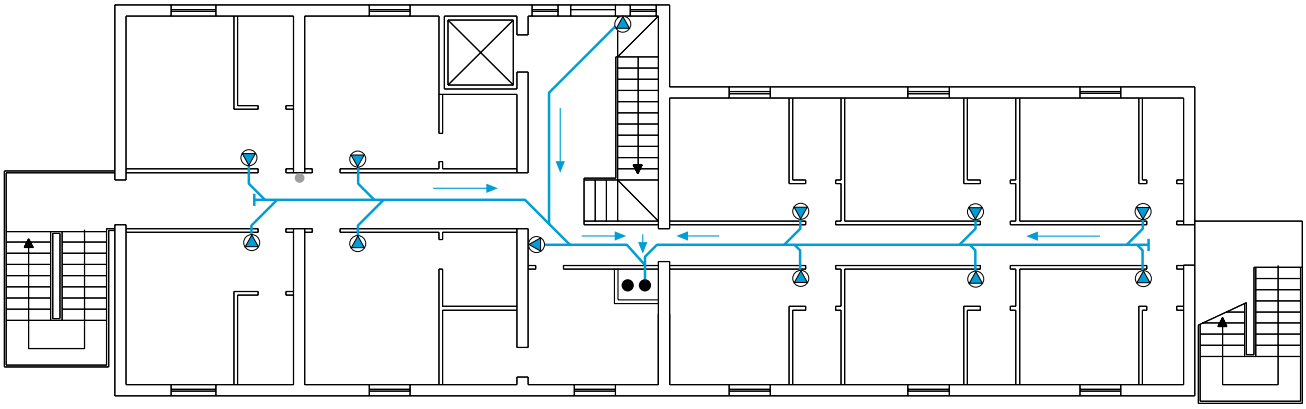

SOCKETS INSTALLED IN THE ROOMS

RECOMMENDED METHOD FOR THESE ENVIRONMENTS
(9m. FLEXIBLE HOSE)

There is a formula for roughly calculating the number of vacuum sockets, even without the working plan which consists in calculating the total surface of the building (including the service rooms)

9m. FLEXIBLE HOSE

$$\text{n° of vacuum sockets} = \frac{\text{total surface}}{40\text{m}^2}$$

TUBÒ VACUUM SYSTEM PREPARATION

MATERIAL SELECTION

Aertecnica supplies a complete line of articles for installing the TUBÒ centralised vacuum system.

TYPES OF PIPING

All of Aertecnica's fittings have been designed to obtain a completely smooth inner surface with perfect joints in order to prevent possible clogging.

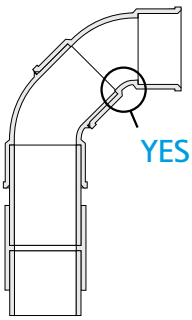

COLD BONDED PIPING
perfectly smooth inner surface

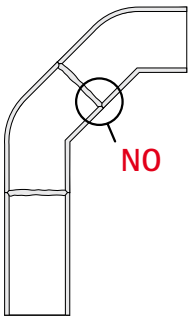

HOT WELDED PIPING
inner surface with burrs from casting

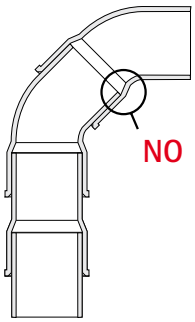

SOCKETED PIPING
COLD BONDED
inner surface with steps

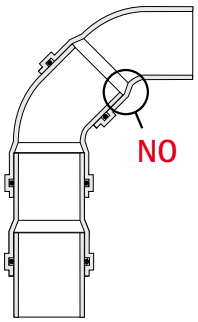

SOCKETED PIPING WITH O-RING
inner surface with steps

OFFTAKE ORIENTATION

When installing the fittings, it is important to orient the offtakes towards the central power unit. This makes it possible for the central power unit to aspirate the material as easily as possible.

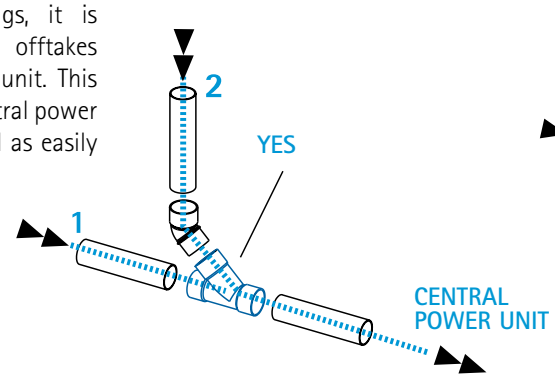

CORRECTLY ORIENTED OFFTAKE

the suction of the dust flows along line 1 or line 2

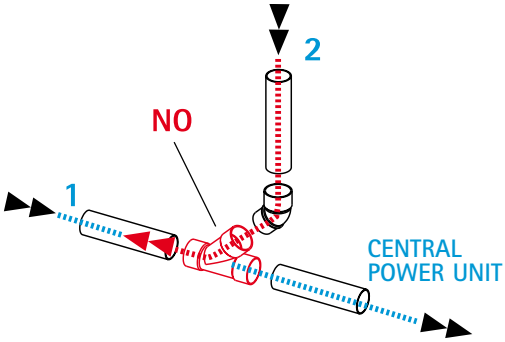

INCORRECTLY ORIENTED OFFTAKE

the suction of the dust along line 2 proceeds in the opposite direction of the central power unit

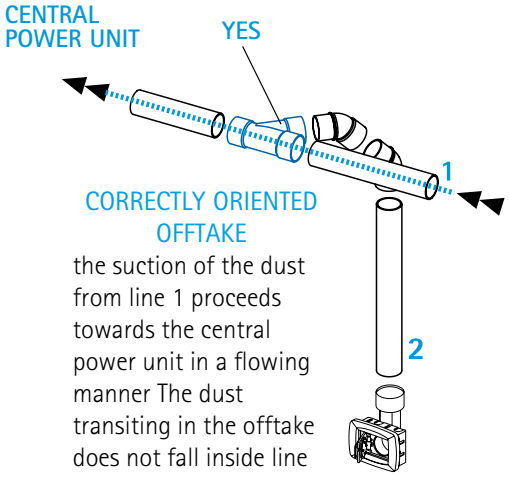

CORRECTLY ORIENTED OFFTAKE

the suction of the dust from line 1 proceeds towards the central power unit in a flowing manner The dust transiting in the offtake does not fall inside line 2.

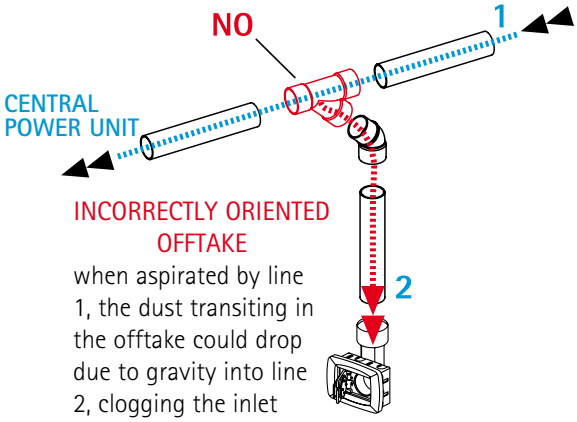

INCORRECTLY ORIENTED OFFTAKE

when aspirated by line 1, the dust transiting in the offtake could drop due to gravity into line 2, clogging the inlet of the vacuum socket connected to the base

HOW TO REDUCE THE PRESSURE DROPS

To optimise the system, eliminating all risks of clogging and reducing loss of pressure, it is recommended to install the tubing in a manner that makes it possible to create the widest curving radiuses possible.
The solutions shown to the side are all optimal.
Aertecnica also supplies an elbow and an offtake with a 90° curvature.

OFFTAKE FOR TWO END LINES

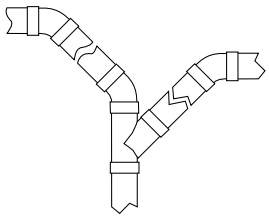

COMPOSED 90° ELBOW

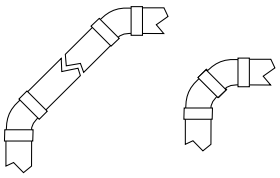

COMPOSED 90° OFFTAKE

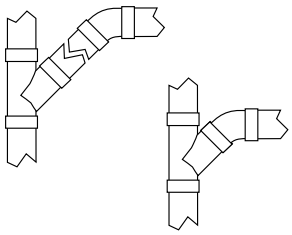

U BOLT TYPE

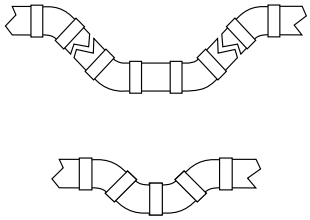

PIPE AND UNION ASSEMBLY

The pipe must only be cut using a specific pipe cutter in order to obtain a perfect cut

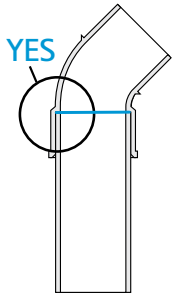

CORRECT CUT
correct assembly of the union

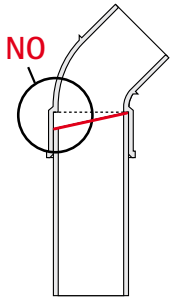

INCORRECT CUT
incorrect pipe cut,
use the wheeled pipe cutter

CLEANING THE BURRS

Once the piping is cut, remove any burrs of material inside and outside of the cut with the deburring tool built into the pipe cutter (code AT110) or with scissors.

1 - pipe cutting
2 - burr material cleaning

NOTE
Before gluing, it is recommended to preassemble the fittings to check the correct installation.

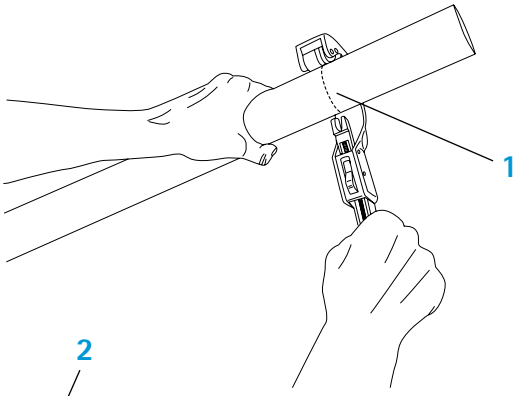

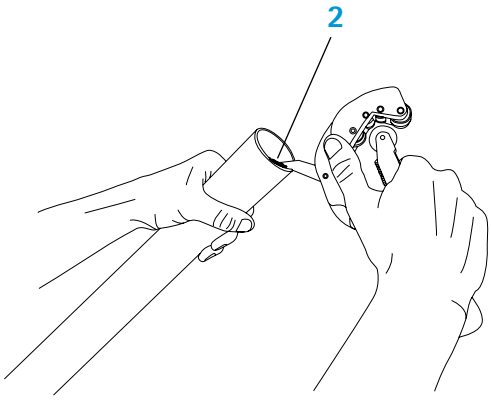

APPLICATION OF THE ADHESIVE

Clean the surface to be glued.

Apply the adhesive only on the "male" union and in a quantity that adhesive residue can be seen when the union is inserted.

3 - the adhesive is applied on the "male" union
4 - the adhesive is not applied on the "female" union

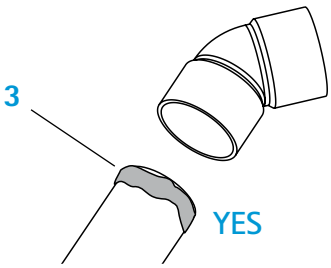

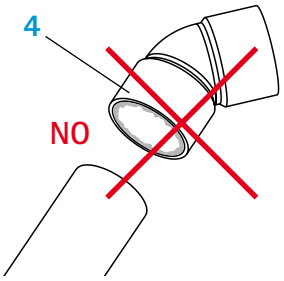

INSTALLATION OF THE SYSTEM BURIED IN THE FLOOR

PIPING PASSAGE

The minimum thickness for laying the piping and the fittings is:

minimum floor slab = ø piping + 2 cm

Install the piping along the passage of the doors to prevent making chases in the walls that divide two environments.

INLET FRAME INSTALLATION

The inlet frames have housings for the electric connection sheathing inlets.

Install the inlet frame in the wall flush with the plaster, keeping the recommended orientation. Check that the inlet frame is perfectly horizontal.

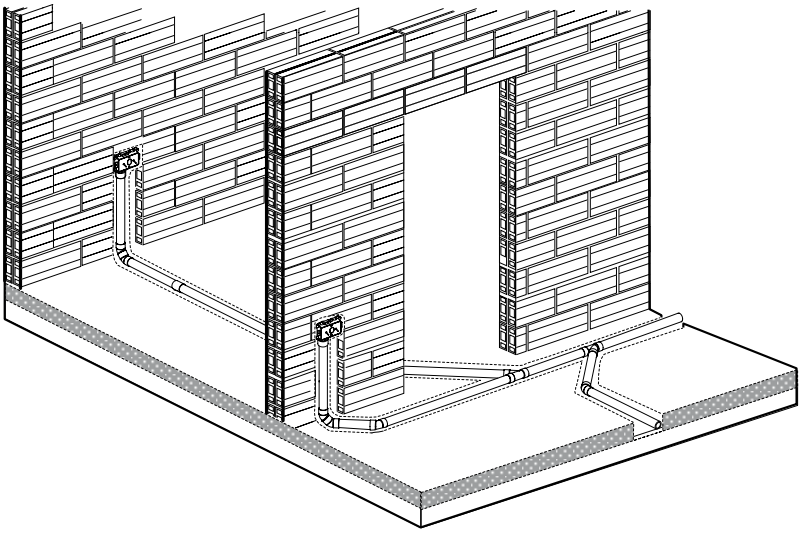

Is possible to install socketframes for:
ø50, ø40 and 2 inch piping, with curved union or straight union
1 - curved union
2 - electrical pre-wired
3 - flush plaster
4 - cover
5 - straight union
6 - 90° alignment
7 - pipe gluing

INSTALLATION NOTES FOR BUILT-IN

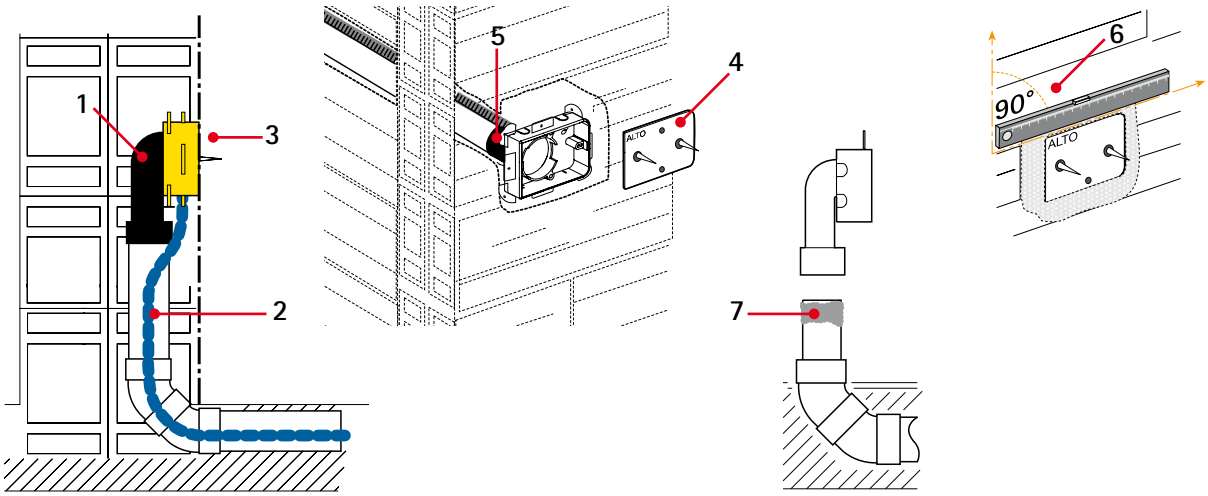

PARALLEL CONNECTION BETWEEN VACUUM SOCKETS

The vacuum socket parallel connection is done in succession using the pre-wired 2x1 ø16.

8 - pre-wired sheathing 2x1 ø16
9 - inlet frame with sheathing inlet for socket connection

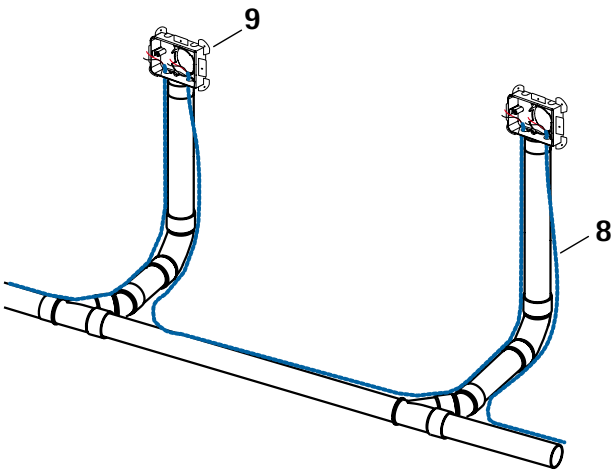

SYSTEM INSTALLATION IN MOVABLE WALLS

In this type of wall, it is possible to install the NEW AIR, LOGIK NEW AIR, SQUARE SOCKETS and the ECLETTIS SOCKET

Is possible to install on plasterboard:
A - ø50 and ø40 with curved union
B - 2 inch with straight union

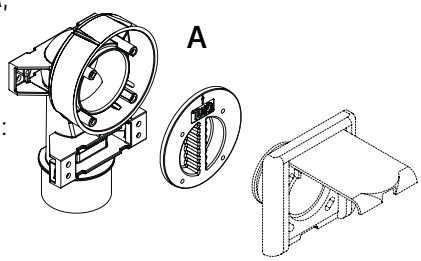

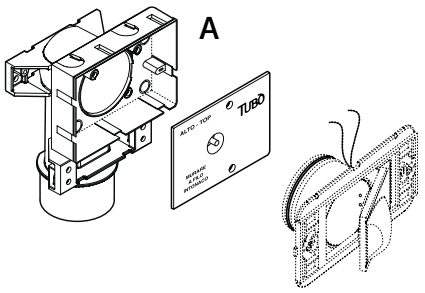

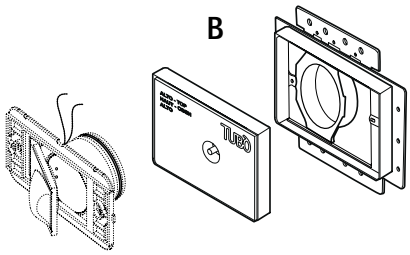

INSTALLATION'S EXAMPLE IN MOVABLE WALLS

LEGEND
2 - plasterboard wall
3 - panel fixing screws
4 - wall fixing collar
5 - flush plaster
6 - activation line 12V

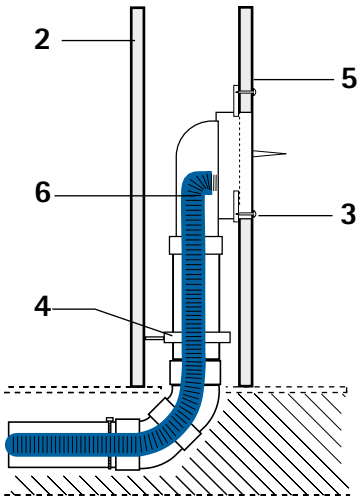

NEW AIR socket frame

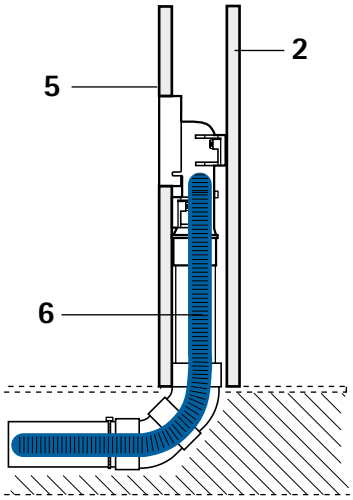

SQUARE socket frame

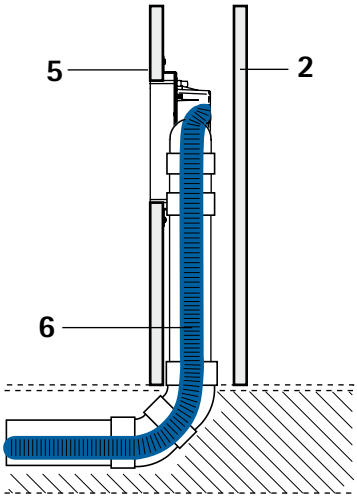

ECLETTIS socket frame

VAC PAN KIT INSTALLATION

1 - socket for furniture VAC PAN
2 - flexible hose for connecting the piping with the socket
3 - socket activation line 12V
4 - socket electrical connection Vac Pan
5 - on/off lever for socket activation
6 - kitchen furniture skirting board
7 - piping from the system

NOTE
The vacuum system is turned on and off by pressing and releasing the lever (5). The dust that is brought near the socket using a broom is aspirated quickly.

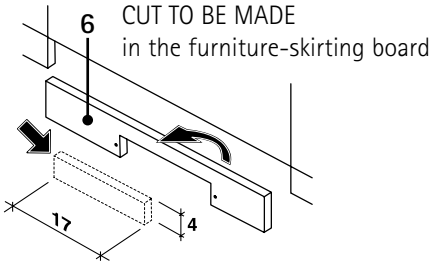

PLAN VIEW

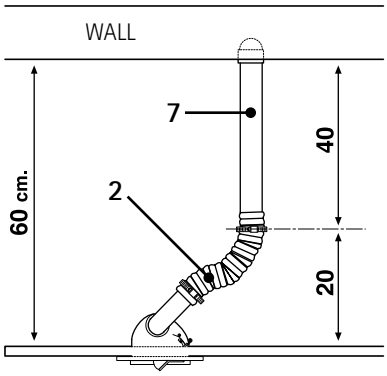

SECTION VIEW

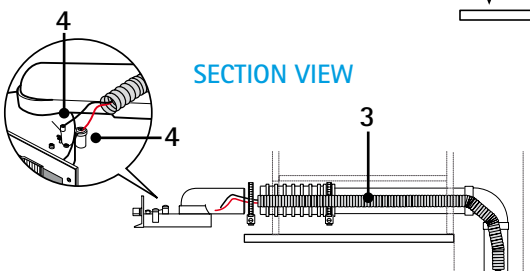

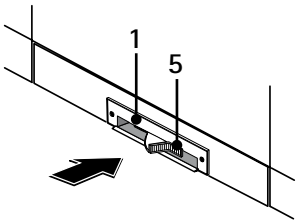

VAC PAN SOCKET FRAME BUILT-IN INSTALLATION

1 - Vac Pan socket frame built-in
2 - built-in trace for wall
3 - ø50 flexible hose with union
4 - socket frame cover with extractor
5 - vacuum line
6 - 12V electrical line
7 - Vac Pan socket
8 - socket electrical connection Vac Pan
9 - frame finish

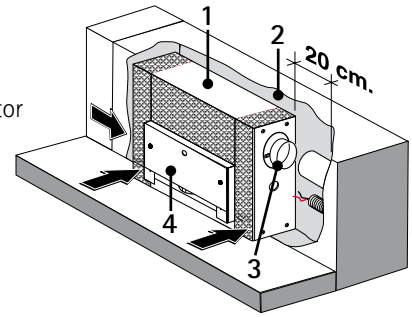

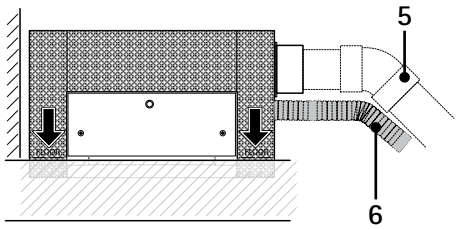

NOTE

The vacuum system is turned on and off by pressing and releasing the lever (10). The dust that is brought near the socket using a broom is aspirated quickly.

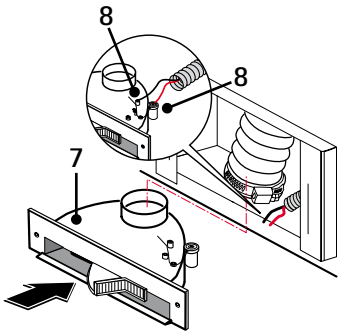

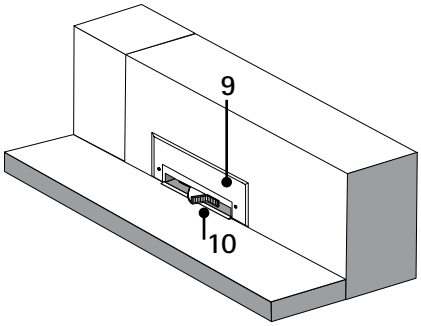

SYSTEM INSTALLATION IN A FALSE CEILING

For systems installed in a false ceiling, it is important to use collars with rubber along the main line to prevent noise caused by vibration and to permit settling.

It is recommended to install the electric boxes in chases under the false ceiling so they can be inspected.

LEGEND
1 - false ceiling
2 - electrical connection lines
3 - electric box accessible for inspection
4 - surface piping fastened to the roof
5 - elastic fastening collar
6 - piping buried in the wall
7 - clamps
8 - socket frame
9 - air conditioning channel

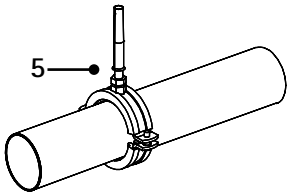

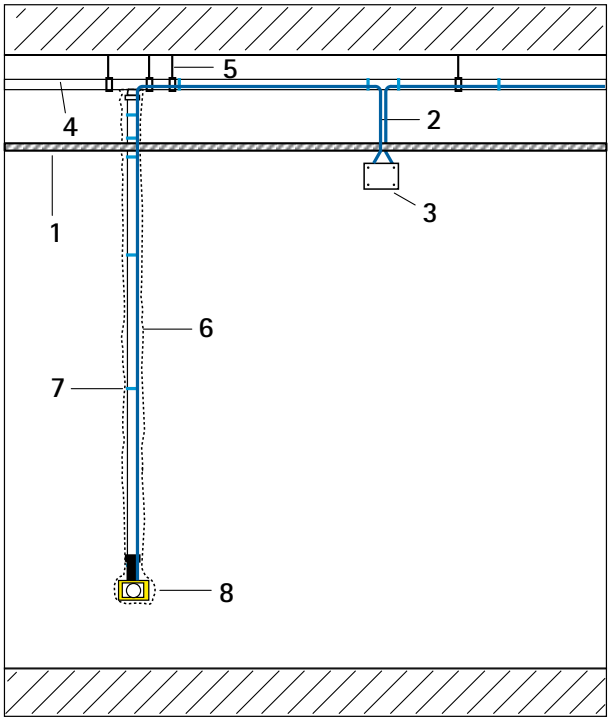

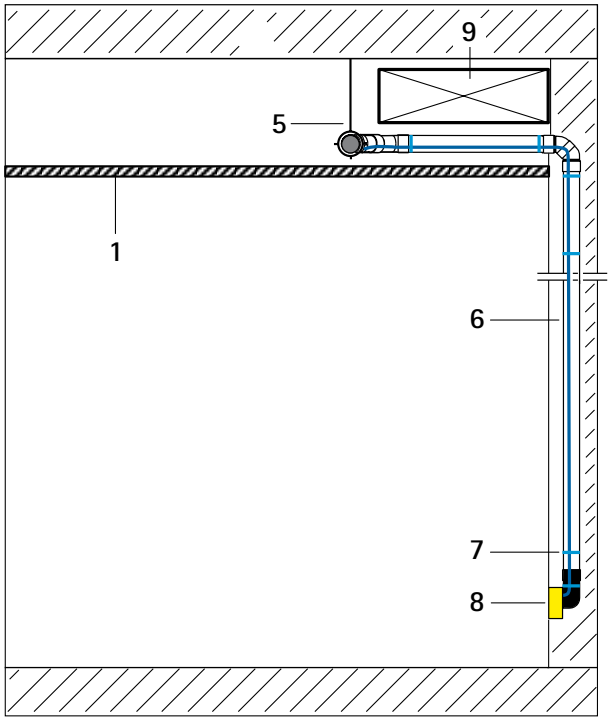

SYSTEM INSTALLATION WITH PIPING ON THE SURFACE

This type of system is installed in two cases:
A - when the walls are made out of reinforced concrete, therefore the chases cannot be made in the walls

B - when the building is already finished and the chasing work would require a complicated project

1 - surface tubing
2 - watertight junction box
3 - fastening collar with pin
4 - electric line to the sockets
5 - reinforced concrete walls
6 - turret

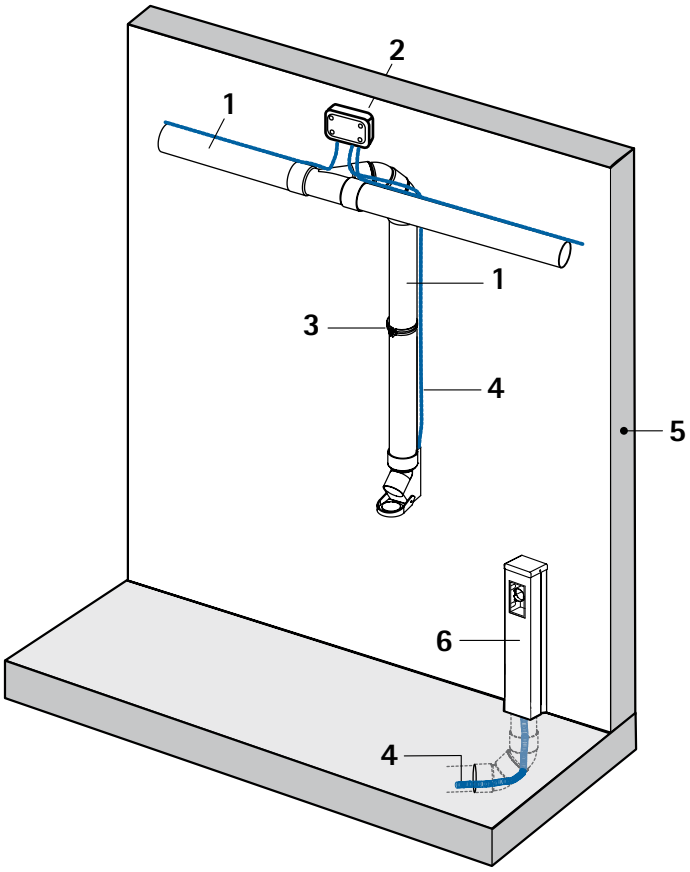

THE VACUUM SOCKETS THAT CAN BE USED FOR THIS TYPE OF SYSTEM ARE:

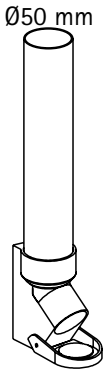

OPEN SOCKET PA450

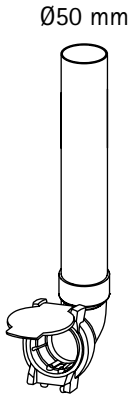

OPEN SOCKET PA455

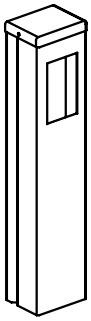

TC100 TURRET

For the NEW AIR and LOGIK NEW AIR sockets, which are not suitable for surface installation, the covering white aluminium turret code TC100, is available, inside of which the vacuum socket is installed.

TUBÒ SYSTEM ELECTRICAL CONNECTION

THE TWO ELECTRICAL LINES

The system consists of a 2x1 low voltage electrical line which connects the vacuum sockets circuit in parallel, making it possible to start the central power unit.

A second 4x1 electrical line is necessary to connect the optional remote disposal

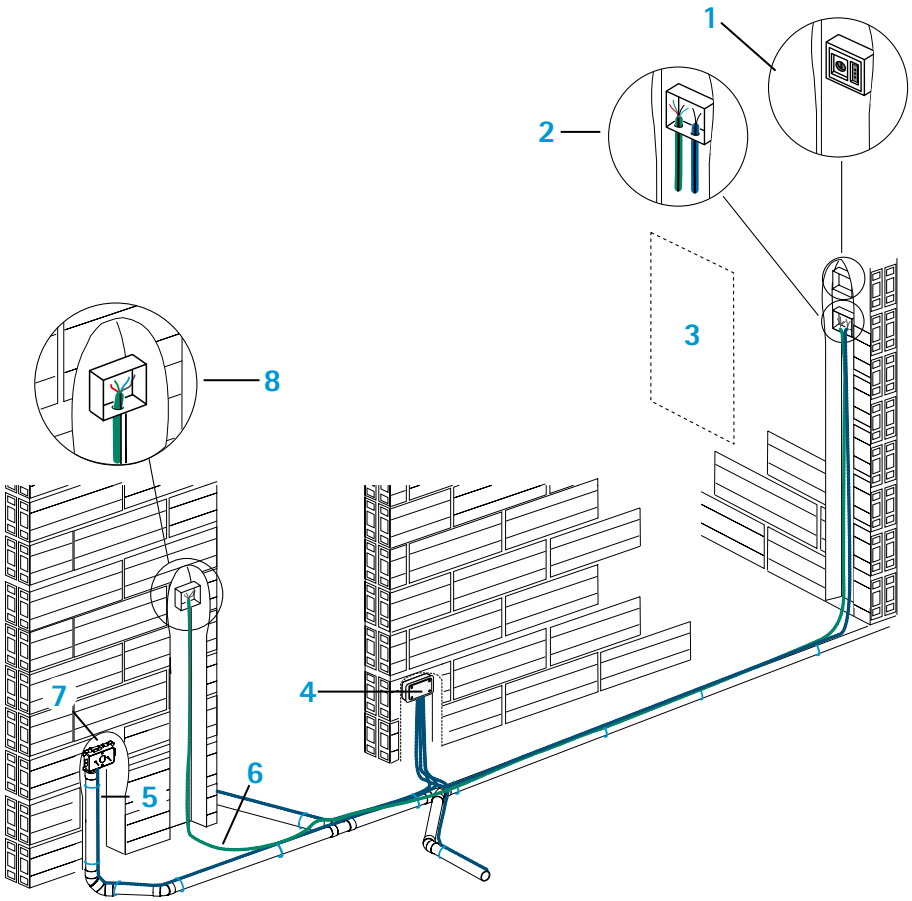

GENERAL COMPONENTS

1 - electric junction box for powering central power unit

2 - electric junction box for 12v socket cable line + remote control

3 - technical room for central power unit

4 - electric junction box

5 - pre-wired sheathing 2x1 ø16 for socket line

6 - pre-wired sheathing 4x1 ø16

7 - socket frames

8 - Dynamic Control Display or Remote panel

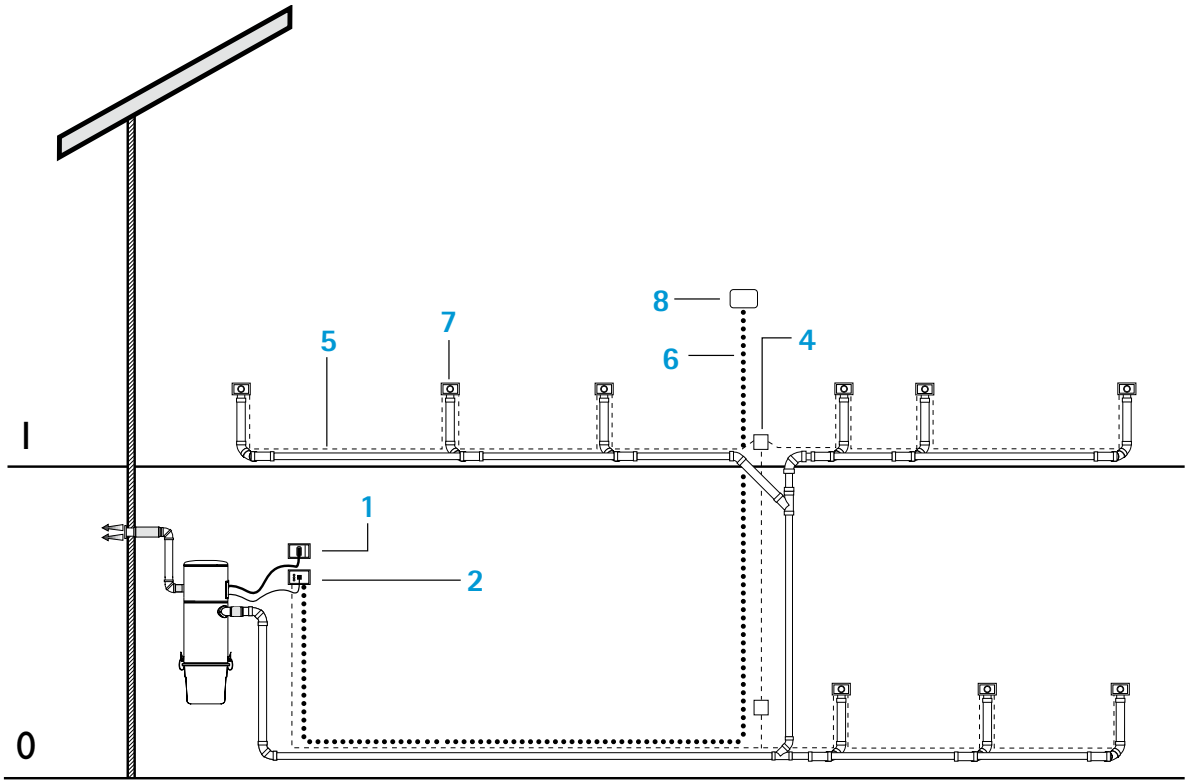

ELECTRICAL CONNECTION FOR THE RESIDENTIAL SECTOR

GENERAL COMPONENTS

1 - Flush-mounted junction box for powering central power unit
2 - 12v socket cable line + Dynamic Control Display
3 - electric junction box
4 - pre-wired sheathing 2x1 ø16 for socket line
5 - pre-wired sheathing 4x1 ø16
6 - socket frames
7 - Dynamic Control Display

NOTE

If installing more than one Dynamic Control Display arrange for an auxiliary power supply.

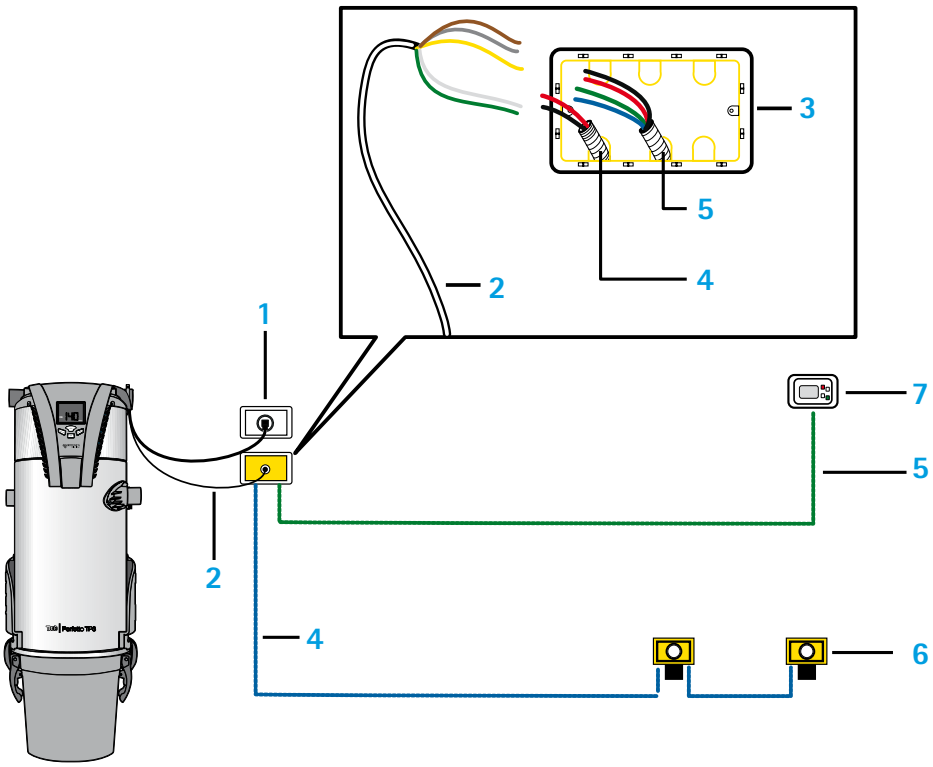

ELECTRICAL CONNECTION FOR TERTIARY SECTOR

GENERAL COMPONENTS

1 - electric board for vacuum module
2 - electric board for dust separator
3 - pre-wired sheathing 2x1 ø16 for socket line
4 - pre-wired sheathing 4x1 ø16 for Dynamic Control Display
5 - electric junction box (SEE NOTE)
6 - Dynamic Control Display
7 - electric junction box for vacuum sockets line
8 - socket frames

NOTE

If installing Dynamic Control Display is necessary auxiliary power supply.

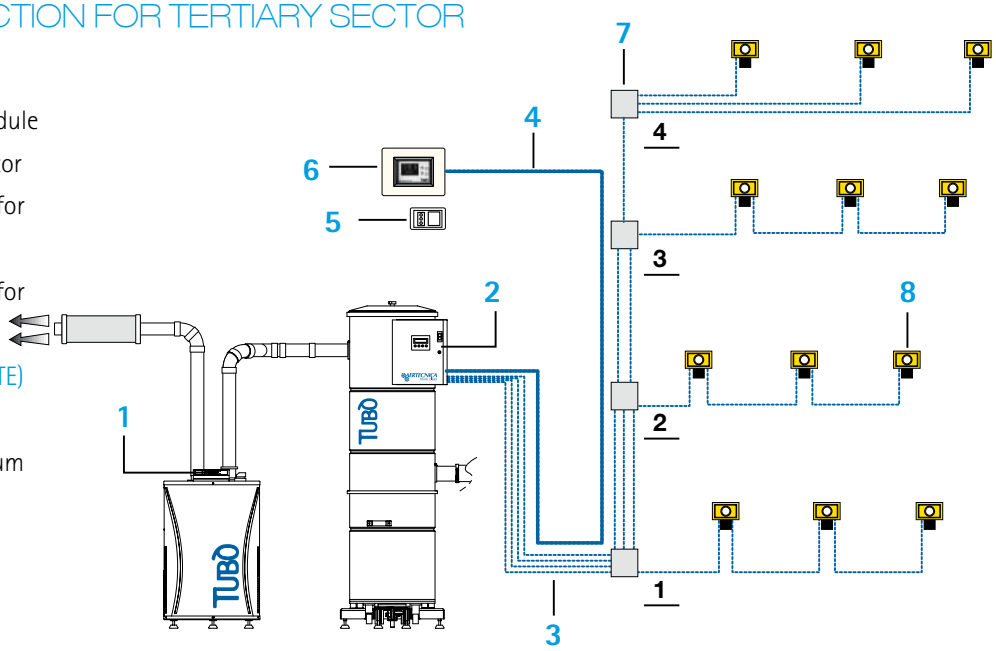

DYNAMIC CONTROL DISPLAY (CMT800)

(FOR PERFETTO TXA, TPA, TP AND CLASSIC TC POWER UNITS)

The Dynamic control display is compatible **in MODBUS mode** with all central power unit models. It signals the start of operation of the central power unit and makes it possible to RESET the system without having to access the machine.

It resets itself according to the type of central power unit to which it is connected.

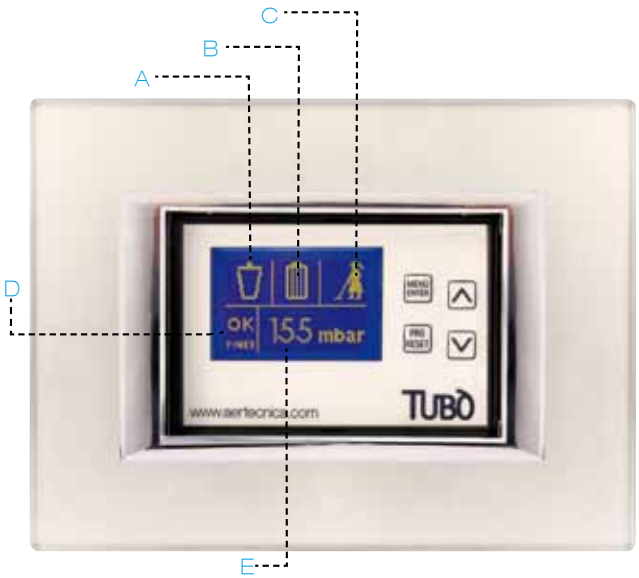

VISUAL INDICATORS

A - CLEAN BAG FILLING

This detects the filling level of the dust container and displays 5 different levels.

B - FILTER CARTRIDGE SATURATION

It displays the saturation level of the filter cartridge based on the calculation of the differential sensors.

C - CENTRAL POWER UNIT ON

This signals that the centralised vacuum system is operating.

D - OPERATING VACUUM RANGE

This displays the vacuum level at which the system is operating:
LO - OK - HI

E - OPERATING VACUUM

This displays the operating vacuum in mbar when the system is operating.

ELECTRICAL CONNECTION for MODBUS mode

(FOR PERFETTO TXA, TPA, TP AND CLASSIC TC POWER UNITS)

GENERAL COMPONENTS

1 - flush-mounted junction box for powering central power unit (SEE NOTE 1)
2 - 12v socket cable line + Dynamic Control Display (SEE NOTE 2)
3 - electric junction box
4 - pre-wired sheathing 2x1 ø16 for socket line
5 - pre-wired sheathing 4x1 ø16
6 - socket frames
7 - Dynamic Control Display (SEE NOTE 3)

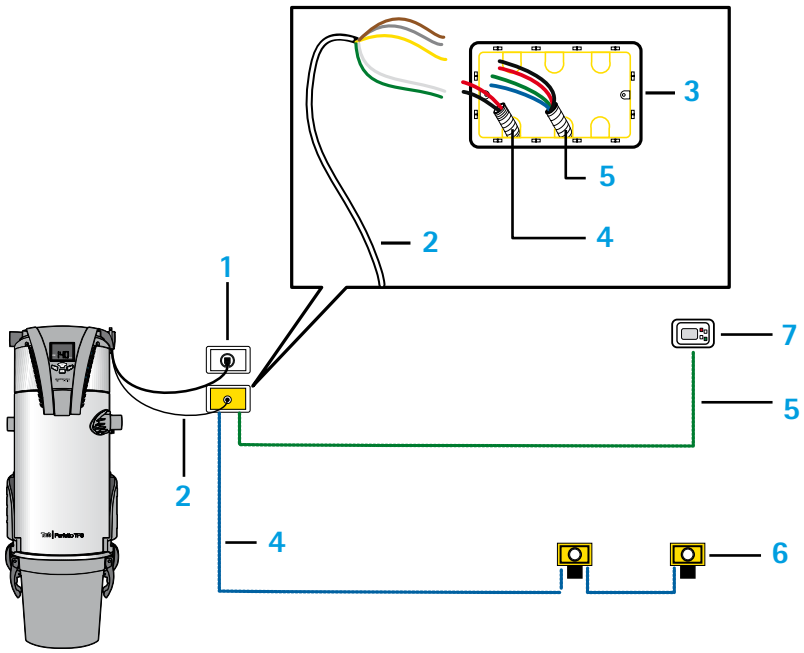

NOTE 1 - EXTERNAL CENTRAL POWER UNIT

The central power unit can also be installed externally; in this case ensure that the junction box is equipped (1) with suitable electrical protection.

NOTE 2 - 12V SOCKET CABLE LINE + DYNAMIC CONTROL DISPLAY

Cable supplied with the central power unit to be wired according to these specifications:
2 wires for micro line
3 power supply wires for Dynamic Control Display.

NOTE 3 - DYNAMIC CONTROL DISPLAY

The central power unit can power only one Dynamic Control Display.

If installing more than one Dynamic Control Display arrange for an auxiliary power supply.

DYNAMIC CONTROL DISPLAY (CMT800)

(FOR QB CENTRAL POWER UNIT)

The Dynamic control display is compatible **in LM mode** with QB central power unit. It signals the start of operation of the central power unit and makes it possible to RESET the system without having to access the machine.

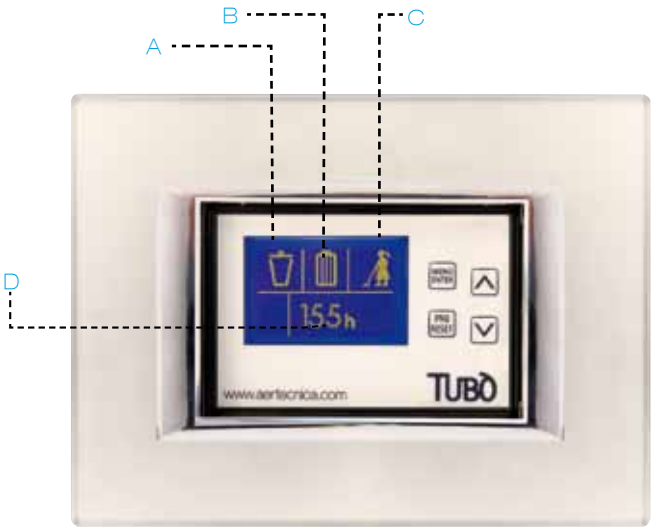

VISUAL INDICATORS

A - CONTAINER FILLING LEVEL

This calculates the presumed filling level of the dust container, using 5 progressive stages.

B - FILTER CARTRIDGE SATURATION

It displays the saturation level of the filter cartridge based on the calculation of the differential sensors.

C - CENTRAL POWER UNIT ON

This signals that the centralised vacuum system is operating.

D - CENTRAL POWER UNIT HOURS OF OPERATION

This displays the total hours of central power unit operation.

ELECTRICAL CONNECTION for LM mode

(FOR QB POWER UNIT)

GENERAL COMPONENTS

1 - flush-mounted junction box for powering central power unit (SEE NOTE 1)
2 - 12v socket cable line + Dynamic Control Display
3 - electric junction box
4 - pre-wired sheathing 4x1 ø16
5 - Dynamic Control Display
6 - pre-wired sheathing 2x1 ø16 for socket line
7 - socket frames

NOTE 1 - EXTERNAL CENTRAL POWER UNIT

The central power unit can also be installed externally; in this case ensure that the junction box is equipped (1) with suitable electrical protection.

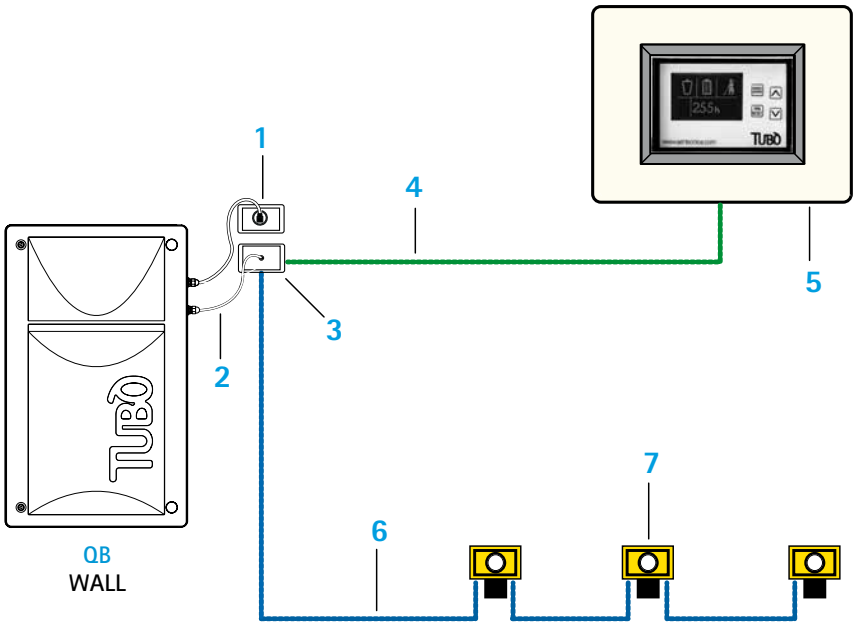

DYNAMIC CONTROL DISPLAY (CMT800)

(FOR STUDIO TS AND C500 POWER UNITS)

The Dynamic control display is compatible **in LM mode** with STUDIO and C500 central power units. It signals the start of operation of the central power unit and makes it possible to RESET the system without having to access the machine.

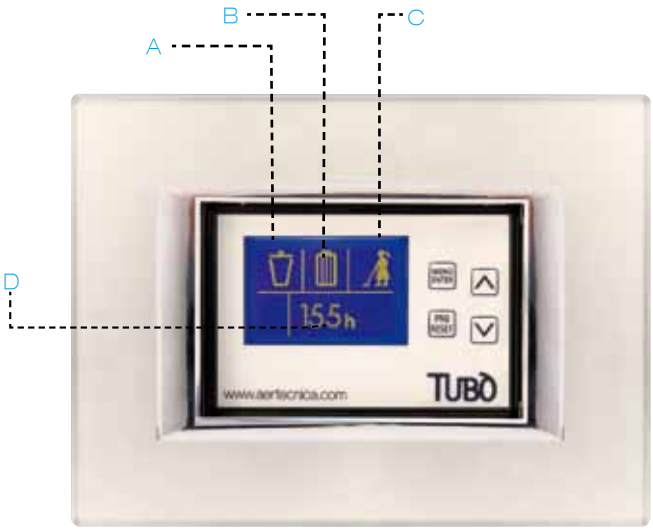

VISUAL INDICATORS

A - CONTAINER FILLING LEVEL

This calculates the presumed filling level of the dust container, using 5 progressive stages.

B - FILTER CARTRIDGE SATURATION

It displays the saturation level of the filter cartridge based on the calculation of the differential sensors.

C - CENTRAL POWER UNIT ON

This signals that the centralised vacuum system is operating.

D - CENTRAL POWER UNIT HOURS OF OPERATION

This displays the total hours of central power unit operation.

ELECTRICAL CONNECTION for LM mode

(FOR STUDIO TS AND C500 POWER UNITS)

GENERAL COMPONENTS

1 - flush-mounted junction box for powering central power unit

2 - dual plug cable (not supplied - cod. 3000388)

3 - plug socket (not supplied- cod.3000400)

4 - electric junction box

5 - pre-wired sheathing 2x1 ø16 for socket line

6 - pre-wired sheathing 4x1 ø16 for Dynamic control display

7 - socket frames

8 - Dynamic control display

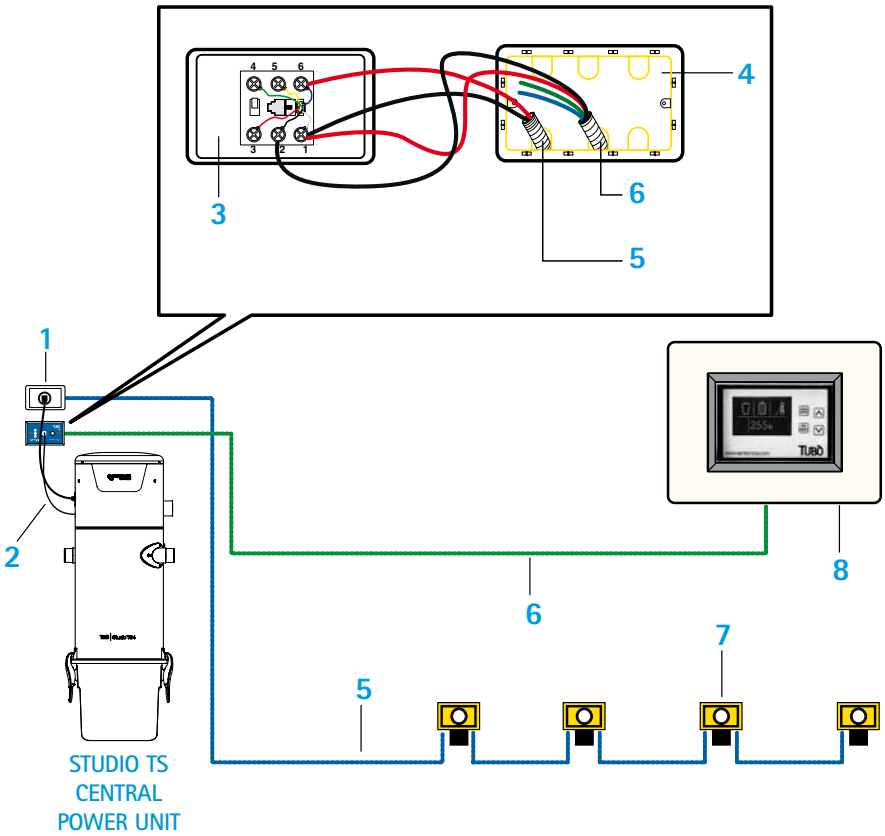

REMOTE PANEL KIT
(FOR QB, STUDIO TS AND C500 POWER UNITS)

The REMOTE panel shows operation of the central power unit. It can be located anywhere in the home, integrating perfectly with the most commonly installed electrical switches available.

PLUG with interface REMOTE and dual plug cable are components supplied.

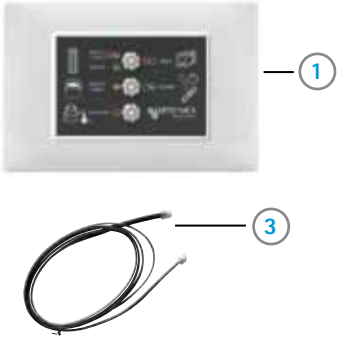

1 - REMOTE panel
2 -PLUG with interface for REMOTE panel
3 - Dual plug cable

VISUAL INDICATORS

GREEN ON
SYSTEM RUNNING
Indicates that the central power unit is operating correctly.

BLINKING GREEN - RED ON
CENTRAL POWER UNIT LOCK DUE TO STARTS ANOMALY
Indicates that the central power unit has locked due to more than 6 starts in one minute.

BLINKING GREEN - BLINKING RED
SAFETY LOCK INTERVENTION
Indicates that the central power unit has locked after continuous use for more than 30 minutes. Safety timer intervenes.

FIXED YELLOW
CHECK DUST CONTAINER FILLING
Indicates the possibility that the dust container is full

BLINKING YELLOW
FILTER MAINTENANCE NECESSARY
Indicates imminent clogging of filter cartridge

BLINKING YELLOW - RED ON
FILTER MAINTENANCE NECESSARY
Indicates imminent clogging of filter cartridge

REMOTE PANEL KIT CONNECTION
(FOR QB, STUDIO TS AND C500 POWER UNITS)

Using the electronic card of PLUG with REMOTE interface to connection REMOTE panel with central power units.

1 - QB built-in central power unit
2 - STUDIO TS or C500 central power units
3 - PLUG with REMOTE interface
4 - dual plug cable
5 - pre-wired sheathing 2x1 ø16 for socket line
6 - pre-wired sheathing 4x1 ø16 for REMOTE panel
7 - REMOTE panel
8 - socket frames
9 - 220v power supply
10 - ø16 pre-wired 3x1 for connection between plug and QB

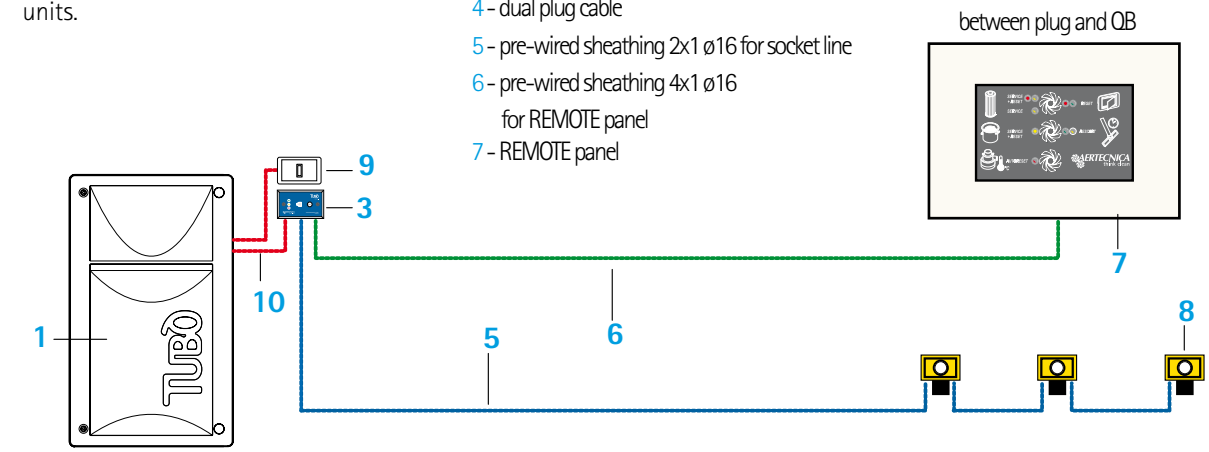

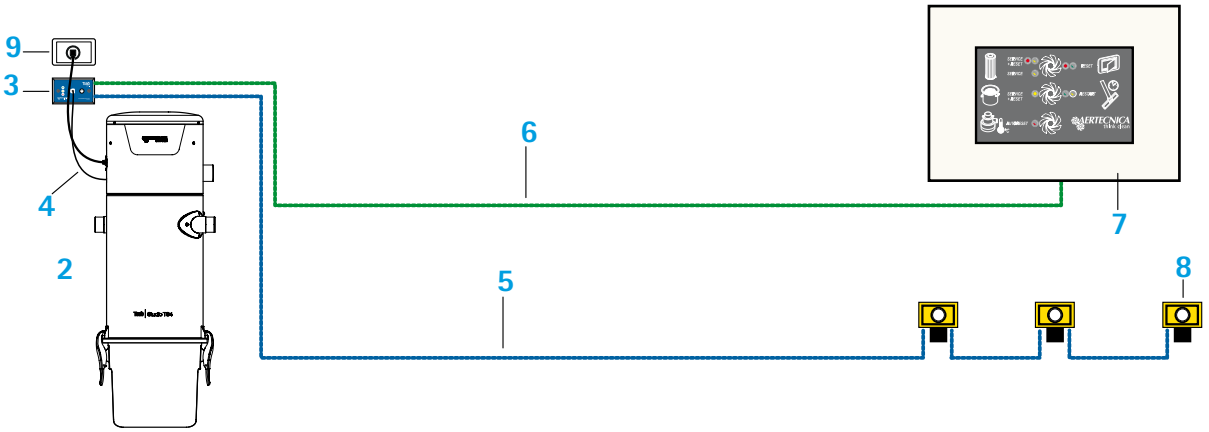

VACUUM SOCKET INSTALLATION

SOCKET BODIES ADAPTABLE TO THE ELECTRICAL SWITCH PLATES

Aertecnica produces NEW AIR series socket bodies and adapter supports that are compatible with the electric switch plates widely found on the market.

NOTE
The electric switch plates are not included in the supply with the exception of the complete vacuum socket models indicated below

NEW AIR SOCKET BODY

NEW AIR ADAPTER SUPPORT
for electrical switch plates

1 - parallel electric connection with the preceding socket
2 - vacuum socket body
3 - adapter support for switch plate
4 - fixing screws
5 - electrical switch plate (not supplied by Aertecnica)
6 - OR gasket to be lubricated
7 - easy door opening
8 - parallel electric connection with the following socket

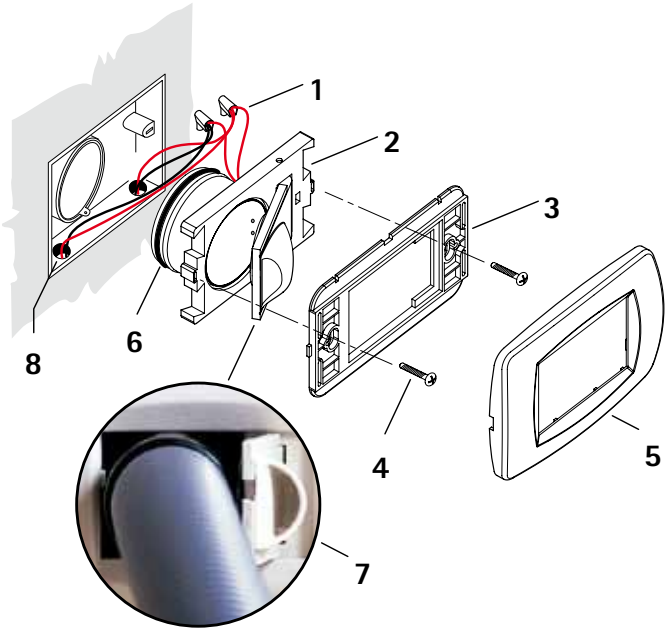

COMPLETE VACUUM SOCKET

Aertecnica also produces the following complete vacuum socket lines.

NEW AIR SOCKET WITH NORMAL OPENING
The central power unit turns on with the insertion of the flexible hose or, with an electrified hose, by using the switch on the handle.
Electrical switch plates included.

The socket may be equipped with the microswitch kit for turning on the central power unit when the door is opened (code NA699)

LOGIK NEW AIR SOCKET
The central power unit turns on with the insertion of the flexible hose or, with an electrified hose, by using the switch on the handle.

SQUARE SOCKET BODY
The central power unit turns on with the insertion of the flexible hose or, with an electrified hose, by using the switch on the handle.

NEW AIR TOUCH SOCKET
New Air Touch covers the sockets with elegant retractable systems. The sockets include a socket body, plate support and electrical switch plate.

The central power unit turns on with the insertion of the flexible hose or, with an electrified hose, by using the switch on the handle.

ECLETTIS TUBÒ VACUUM SOCKET

The Eclettis TUBÒ socket represents the ideal solution for architecturally sophisticated environments.
A brushed stainless steel finish combines aesthetic design with high technology.
The central power unit turns on with the insertion of the flexible hose or, with an electrified hose, by using the switch on the handle.

The Eclettis TUBÒ vacuum socket can be installed in masonry walls, with a curved union or a straight union, and in plasterboard walls.

1 - parallel electrical connection
2 - Eclettis TUBÒ socket body
3 - inlet frame with Eclettis socket frame
4 - fixing screws
5 - OR gasket to be lubricated

ECLETTIS TUBÒ
WHITE

ECLETTIS TUBÒ
INOX

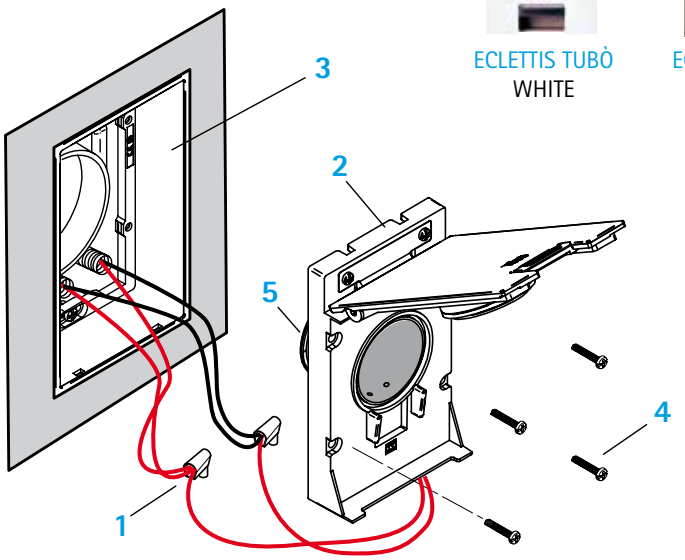

TURNING ON THE CENTRALISED VACUUM SYSTEM

Turning on the centralised vacuum system depends on the type of hose and the installed vacuum socket model.

THERE ARE TWO TYPES OF HOSES:
with the TYPE 1 flexible hose the central power unit turns on by inserting the hose in the inlet A.

with the TYPE 2 flexible hose, the central power unit turns on by pressing the switch on the hose itself.

VACUUM SOCKET ELECTRIC CONTACTS
The electric contacts are inside the vacuum socket. (E).
The centralised vacuum system turns on when the union (B) of the TYPE 1 flexible hose or the plates (D) of the TYPE 2 flexible hose come into contact with the electric contacts.

NOTE
With socket models Air Active, Open and the NEW AIR sockets with a microswitch (NA699), the central power unit turns on when the socket door is opened.

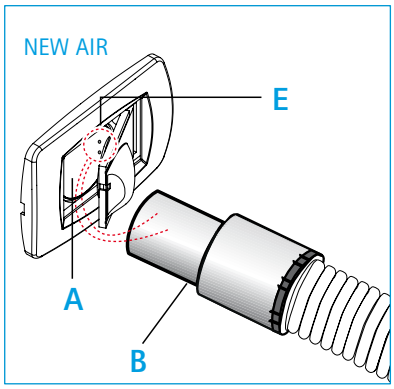

TYPE 1
flexible hose with activator union (B)

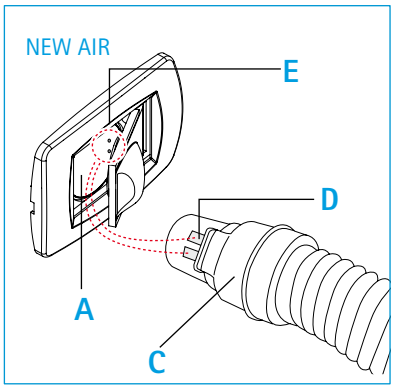

TYPE 2
flexible hose with switch (C)

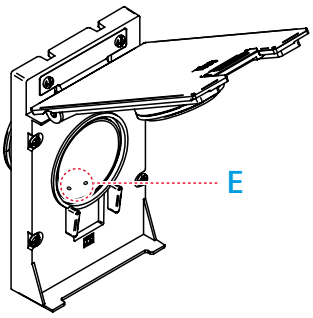

ECLETTIS TUBÒ

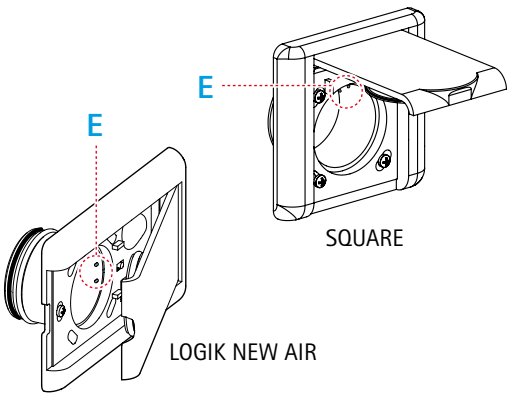

SQUARE

LOGIK NEW AIR

INSTALLATION OF THE PLASTER MOULD

The plaster mould is used with the NEW AIR inlet frames, in the case of wall irregularities, cement must be used.

1 - insert the plaster mould (A) into the NEW AIR inlet frame (B)
2 - arrange the plaster (C) around the mould
3 - cut the part of the extension that exits from (D) the plaster line flush with the wall using an appropriate cutter (E).
4 - fit the NEW AIR vacuum socket (F) to proceed with the installation

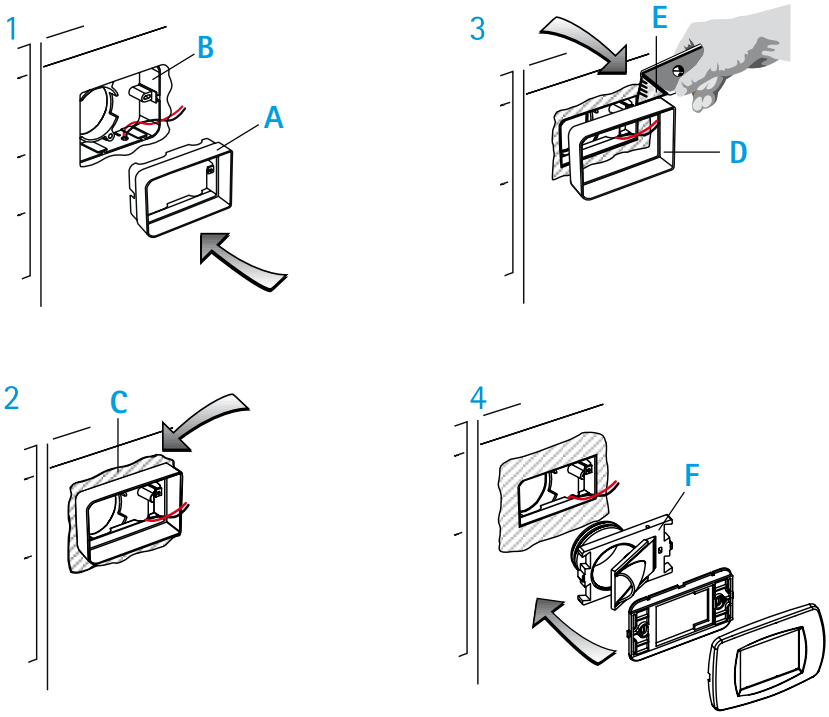

NOTE
The mould for the finishing is only used with the NEW AIR inlet frames.

INSTALLATION OF THE EXTENSION FOR VACUUM SOCKETS

The extensions are necessary when the inlet frame is not properly built into the wall with respect to the surface of reference and the airtight seal of the system is not guaranteed.

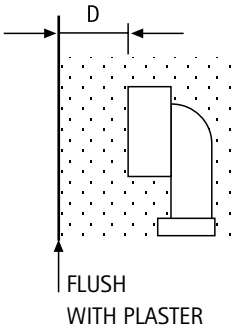

FOR D BETWEEN 20 AND 32mm USE THE EXTENSION BY CUTTING OFF 13mm FROM THE PART OPPOSITE OF THE OR

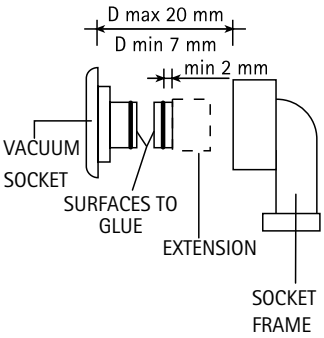

FOR D BETWEEN 7 AND 20 mm ENGAGE THE EXTENSION FROM THE PART OF THE OR IN THE SOCKET AND CUT IT TO 2 mm. GLUE IT USING CIANOACRYLIC GLUE

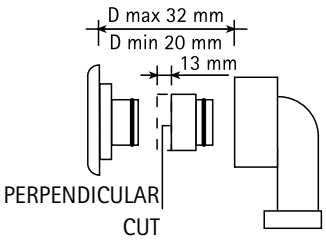

FOR D BETWEEN 20 AND 32mm USE THE EXTENSION BY CUTTING OFF 13mm FROM THE PART OPPOSITE OF THE OR

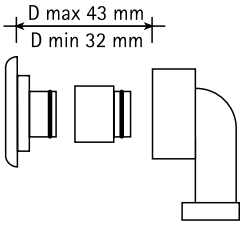

FOR D BETWEEN 32 AND 43mm, USE THE ENTIRE EXTENSION

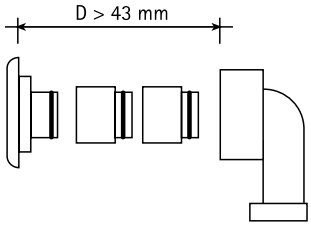

FOR D LONGER THAN 43mm USE TWO OR MORE EXTENSIONS

SELECTION OF THE CENTRAL POWER UNIT

PERFETTO TPA-TP LINES

The TP line represents a new conception of advanced vacuum systems. The TPA line also has the APF self-cleaning system. It can also be installed outside.

PERFETTO INOX TXA LINE

The TXA line includes all of the prestigious solutions of the TPA line, enclosed in an Inox AISI 304 stainless steel body.
It can also be installed outside.

CLASSIC TC LINE

The TC line represents the best solution at a limited cost among advanced vacuum systems.
It can also be installed outside.

PART DESCRIPTION

1 - Right and left double air exhaust
2 - Electronic card protection
3 - Electric motor
4 - Temperature sensor
5 - AVI display
(PERFETTO INOX TXA, PERFETTO TPA, PERFETTO TP models)
6 - Sound-proofed chamber
7 - Integrated vacuum socket
(PERFETTO INOX TXA, PERFETTO TPA, PERFETTO TP models)
8 - Self-Cleaning filter APF system
(PERFETTO INOX TXA, PERFETTO TPA models)
9 - PRECISION filter cartridge
10 - Cone conveyor
11 - CLEAN BAG dust bag with dust contact preventing quick closure
12 - CLEAN BAG blocking system
(points 16 and 17 only for PERFETTO INOX TXA, PERFETTO TPA, PERFETTO TP models)
13 - Dust container
14 - Ergonomic handles
15 - Side multifunction pockets
(not included in TC, TX1A, TP1A and TP1 models)
16 - QUICK FIX bracket and front hook
17 - Double right and left dust inlet

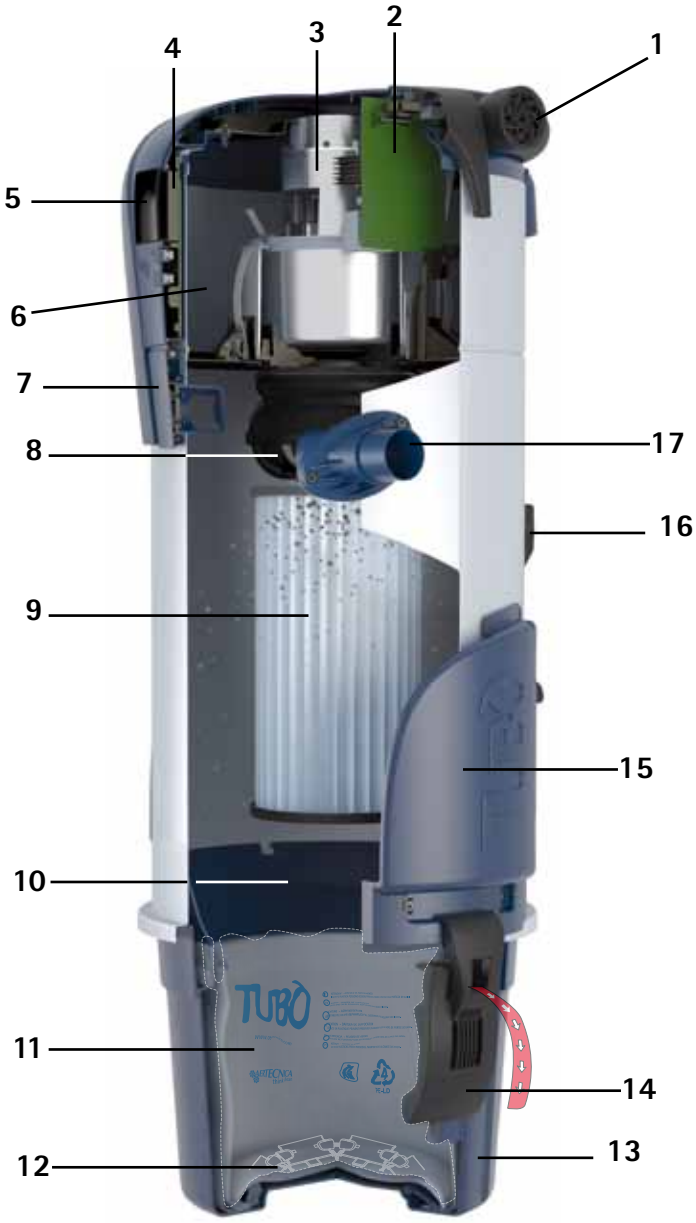

STUDIO TS LINE

Studio TS, new central power units with electronic, featuring SOFT START starting and boasting remote monitoring thanks to the REMOTE Control Panels (cod. CMT800 - CM8890).

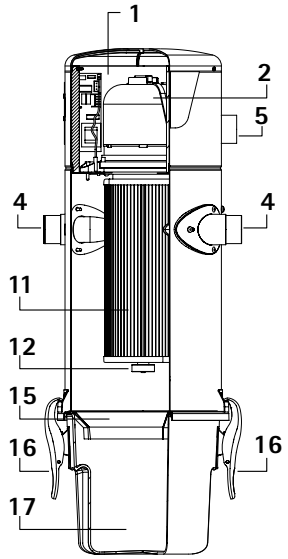

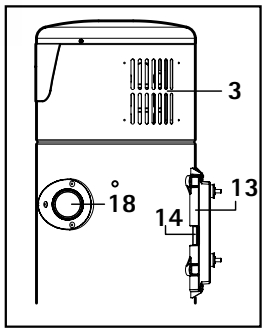

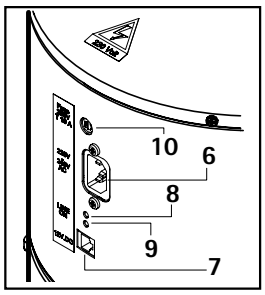

PART DESCRIPTION

1 - Sound-proof motor compartment
2 - Electric motor
3 - Motor air intake
4 - Dual right/left dust inlet
5 - Air Exhaust line **(only TS4)**
6 - Power supply
7 - Operation Signal input
8 - Green Led On: power unit on
9 - Green Led On: power unit running
10 - Fuse
11 - Filter cartridge
12 - Fixing Knob
13 - Fixing bracket
14 - Locks lever
15 - Cone conveyor
16 - Ergonomic handles
17 - Dust container
18 - Dust inlet closing cap

C500

C500 central power unit installing two motors and ø63mm top air expulsion. With simplified electronics, but still with optimal performance.

PART DESCRIPTION

1 - Top air exaust, ø63
2 - Cover
3 - Sound-proof motor compartment
4 - Power supply input
5 - Operation signal input
6 - Left dust inlet
7 - Right dust inlet
8 - Fixing bracket
9 - Dust container hinges
10 - Filter cartridge
11 - Dust conveyor
12 - Dust container

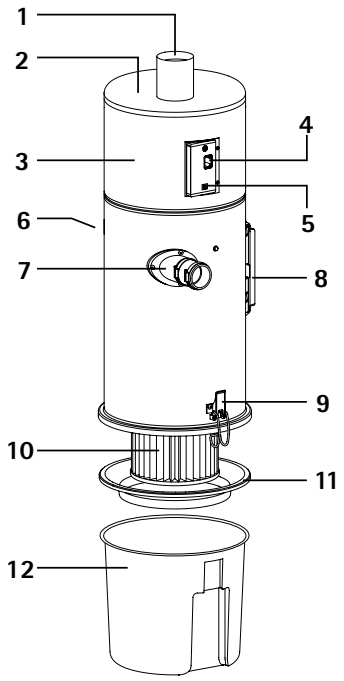

INSTALLATION OF THE SINGLE-PHASE CENTRAL POWER UNIT

POSITIONING

The central power unit of PERFETTO TXA, PERFETTO TPA,PERFETTO TP and CLASSIC TC lines, are installed in service areas (for example, store-rooms, garages, cellars) aired and protected from extreme temperature changes.

The high degree of electrical protection and resistance to atmospheric conditions also allows external installation.

The dust inlet and air expulsion on both sides offer maximum installation flexibility. The installation area must be sufficiently spacious and lighted to allow filter cartridge and dust bag substitutions.

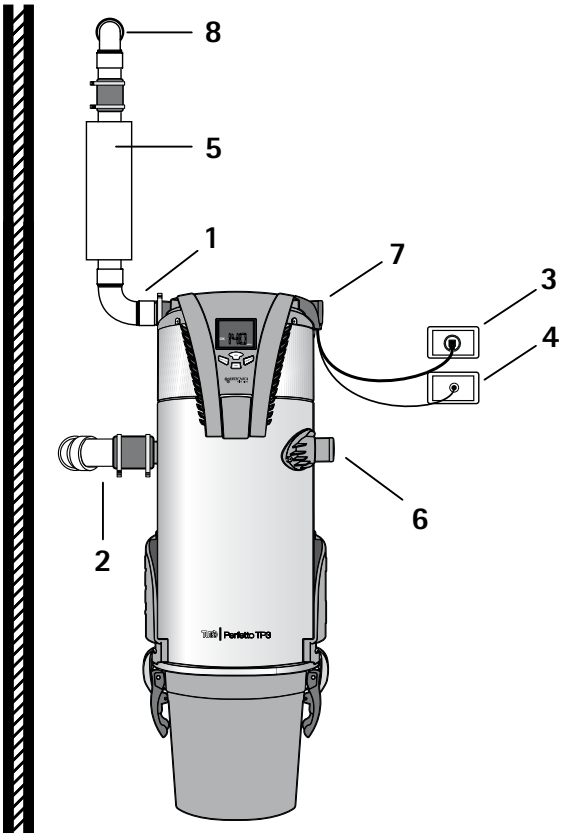

Legend
1 - air exhaust line
2 - dust inlet line
3 - 220/240V central power unit power supply
4 - 12v socket line+ Dynamic Control Display (optional)
5 - silencer
6 - dust inlet + cap
7 - air exhaust + cap
8 - air exhaust grille

INSTALLATION WITH EXHAUST TO THE AMBIENT ATMOSPHERE

When the central power unit is installed externally, the air exhaust conveyor is not needed.
The air grille provided with the central power unit must be installed on both air exhaust openings following the directions indicated below.

EXTERIOR

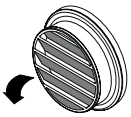
INTERIOR

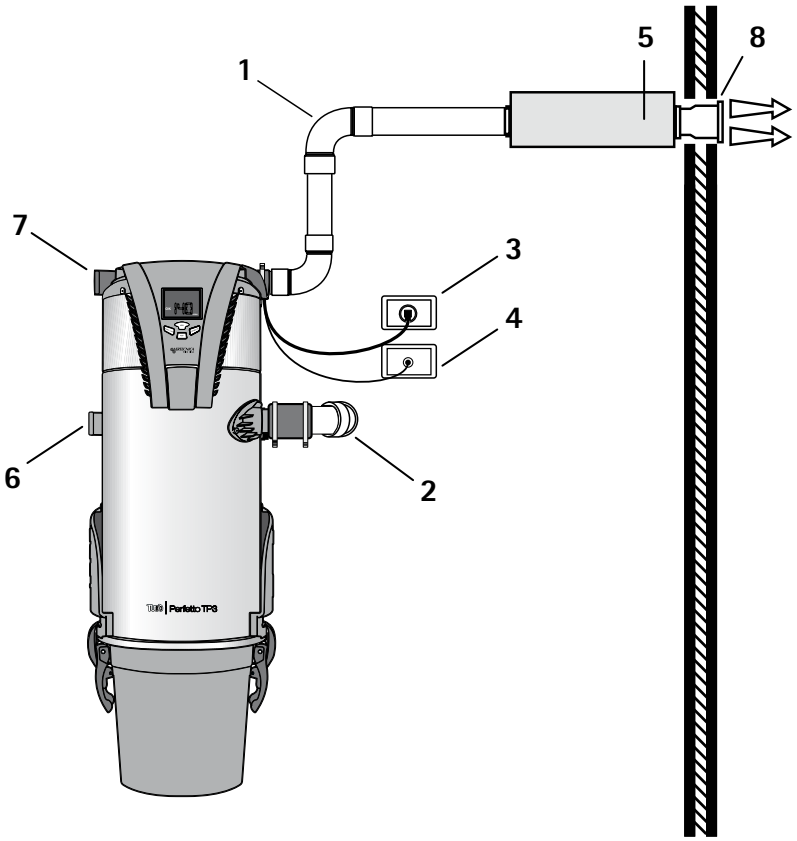

NOTE
this solution is recommended only for central power units installed externally.

CONNECTING THE CENTRAL POWER UNIT TO THE CENTRALISED VACUUM SYSTEM

POWER SUPPLY CONNECTION

The power supply cable with Schuko plug (3) for the central power unit is supplied as standard equipment with the central power unit (2).

SOCKET CABLE CONNECTION

A cable is supplied for connecting the socket line and the Dynamic Control Display (1) with the socket activation consent line and the remote data transmission (4) as standard equipment with the central power units.

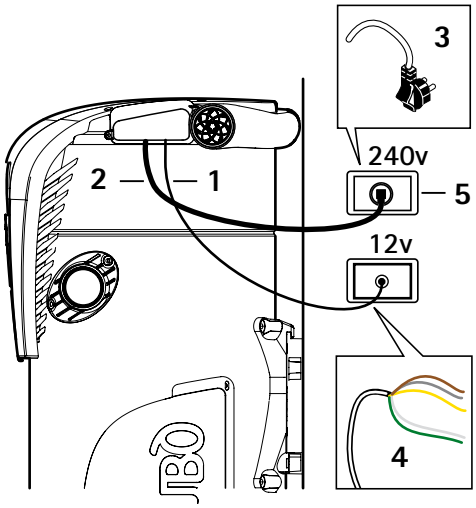

NOTE

When installing the central power unit externally ensure that a junction box (5) with an adequate degree of electrical protection is used.

INSTALLATION ALLOWANCES - (PERFETTO TXA, TPA, TP AND CLASSIC TC POWER UNITS)

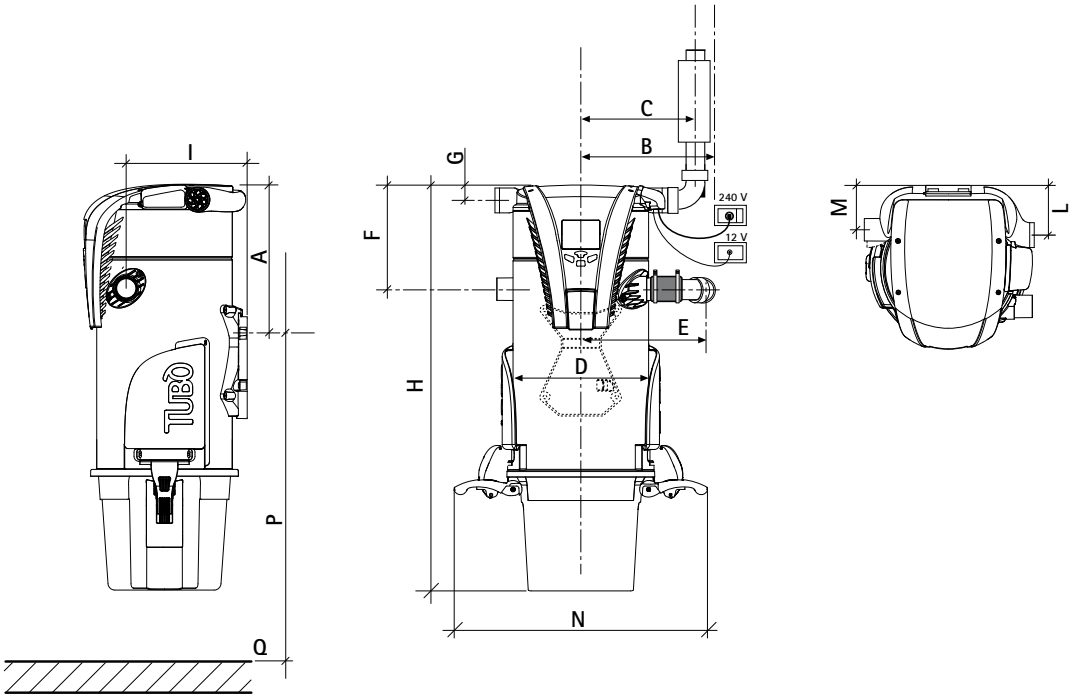

	PERFETTO TXA				PERFETTO TP – PERFETTO TPA				CLASSIC TC			
	TX1A	TX2A	TX3A	TX4A	TP1/TP1A	TP2/TP2A	TP3/TP3A	TP4/TP4A	TC1	TC2	TC3	TC4
A	138	328	418	418	138	328	418	418	138	328	418	418
B	350	350	350	350	350	350	350	350	350	350	350	350
C	257	257	257	257	257	257	257	257	257	257	257	257
D	300	300	340	340	300	300	340	340	300	300	340	340
E	286	286	304	304	286	286	304	304	286	286	304	304
F	230	230	340	340	230	230	340	340	230	230	340	340
G	34	34	34	34	34	34	34	34	34	34	34	34
H	600	900	1115	1115	600	900	1115	1115	600	900	1115	1115
I	273	273	308	308	273	273	308	308	273	273	308	308
L	115	137	137	137	115	115	137	137	115	115	137	137
M	103	112	112	112	103	103	112	112	103	103	112	112
N	560	560	600	600	560	560	600	600	560	560	600	600
P	1500	1400	1400	1400	1500	1400	1400	1400	1500	1400	1400	1400

P Recommended allowance
Q Floor line
The indicates measurements are in mm.

INSTALLATION ALLOWANCES - (STUDIO AND C500 POWER UNITS)

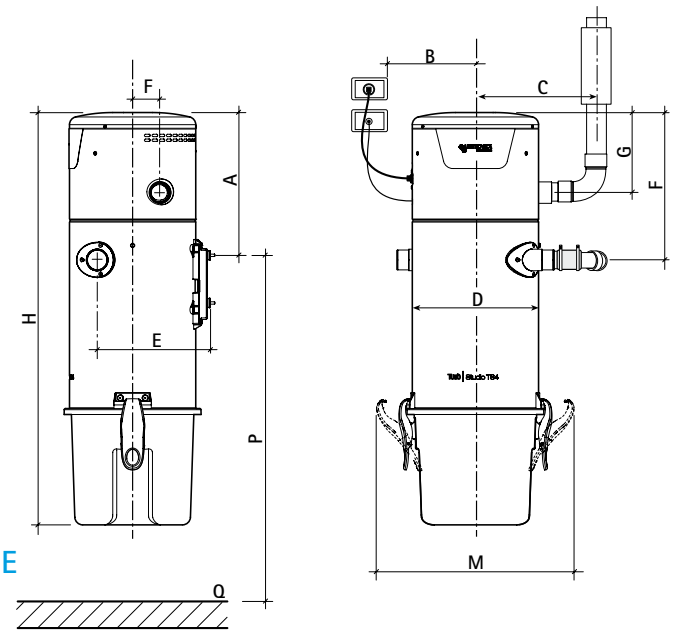

STUDIO TS LINE

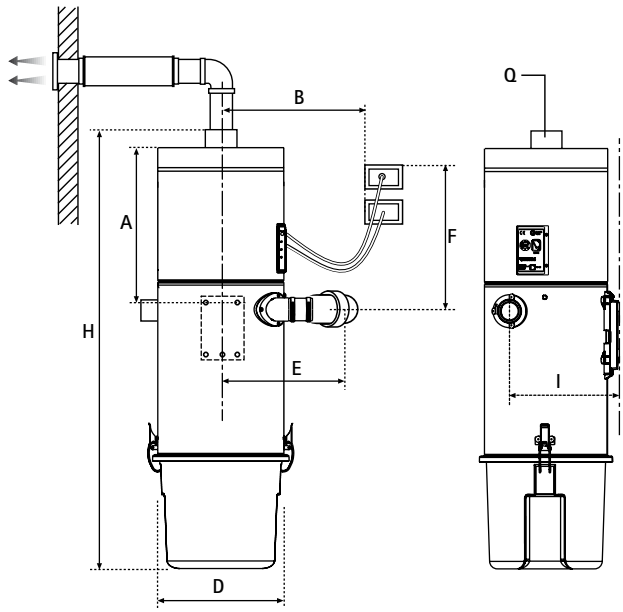

C500

	STUDIO TS1	STUDIO TS2	STUDIO TS4	C500
A	143	298	360	360
B	400	400	350	350
C	330	330	260	-
D	280	280	320	320
E	270	270	290	290
F	314	321	370	400
G	124	124	200	-
H	650	900	1038	1030
I	250	250	285	285
M	47	47	51	-
P	1500	1400	1400	-

P Recommended allowance
Q Floor line
The indicates measurements are in mm.

SELECTION OF THE QB CENTRAL POWER UNIT

QB CENTRAL POWER UNIT - Q200

It represents the best central power unit alternative that minimises the space occupied in modern homes and keeps all the functionalities of advanced vacuum systems.

BUILT-IN ENCLOSURE

Thanks to its reduced depth (23 cm) it can be installed in perimeter walls with a minimum thickness of 25 cm.
The door can be painted the same colour as the wall.

WALL ENCLOSURE

The total depth of the enclosure is 23.5 cm, with a degree of electrical protection equal to IP55, and can be installed in walls anywhere.
The entire enclosure can be painted the same colour as the wall.

THE TWO QB CENTRAL POWER UNIT SOLUTIONS

PART DESCRIPTION

1 - box for built-in power unit
2 - insulation
3 - door
4 - box for wall power unit
5 - fastening brackets
6 - QB central power unit body

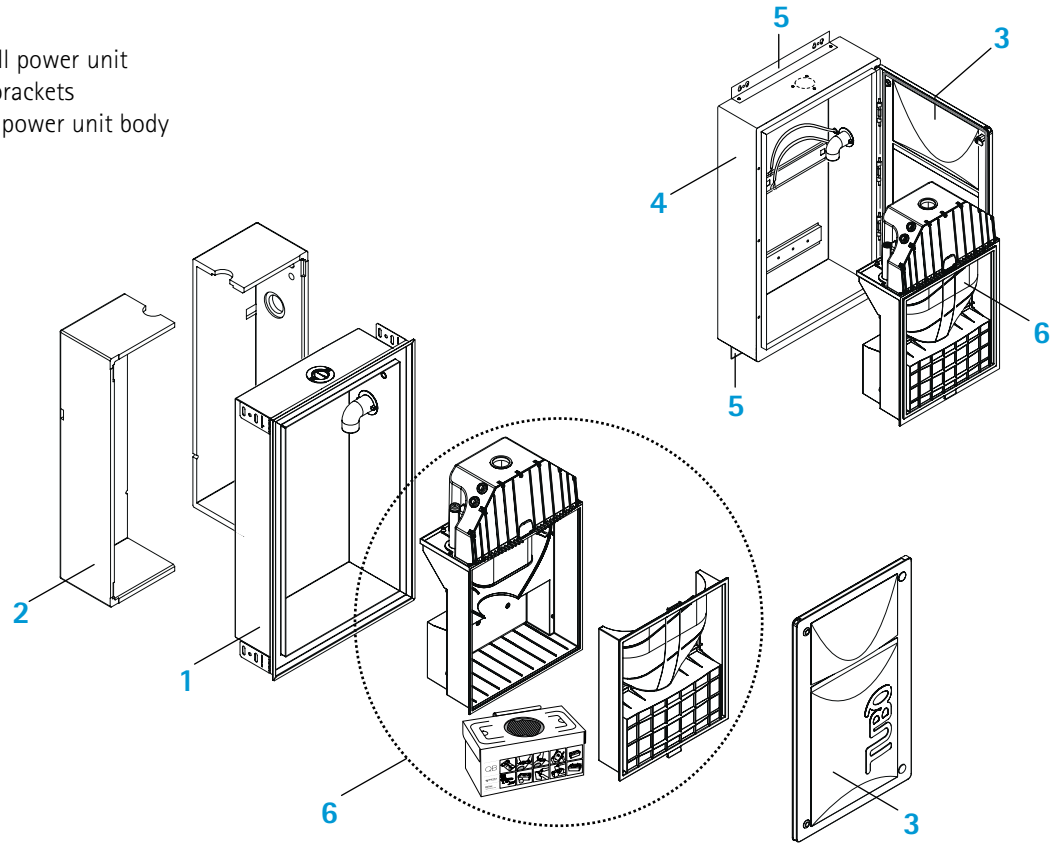

INSTALLATION OF THE QB CENTRAL POWER UNIT

QB INSTALLATION WITH BUILT-IN ENCLOSURE

TECHNICAL FEATURES

1 - Insulation
2 - Box
3 - Central power unit body
4 - Door

ARRANGEMENT

The built-in box has a depth of only 23 cm. This makes it possible to install it in perimeter walls with a minimum thickness of 25 cm.
The enclosure and the door are made out of galvanized steel and have a gasket.
The QB central power unit reaches degree of electrical protection IP55 with channelled air exhaust and IP45 with air exhaust from the door.

This solution is suitable for outdoor installations.

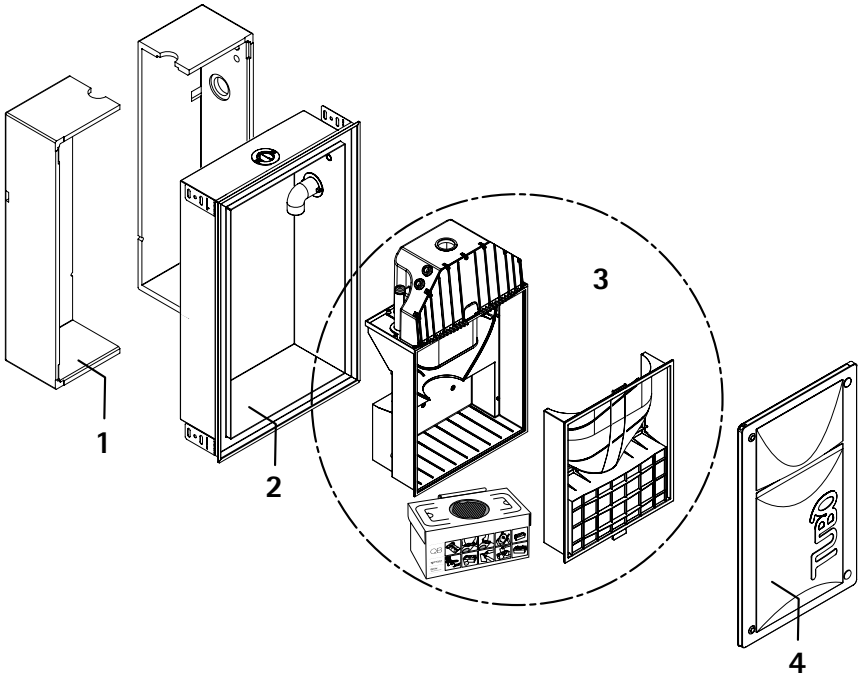

DIMENSIONS OF THE BUILT-IN BOX

The measurements of reference (in cm) for the box are provided to the side.

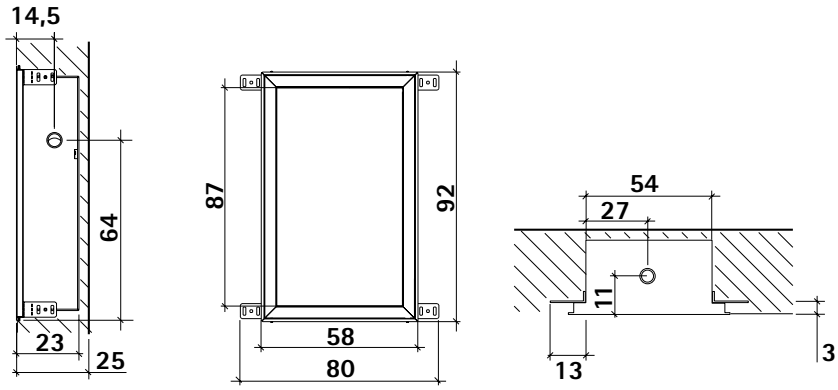

CENTRAL POWER UNIT INSERTION AND FIXING

The installation phase of the central power unit is simple and quick:
insert the central power unit body and hook it into the two holes in the box using the appropriate pivots (A).
The dust inlet fitting will engage in the housing in the central power unit.
Fix the central power unit to the built-in enclosure using the appropriate screws.

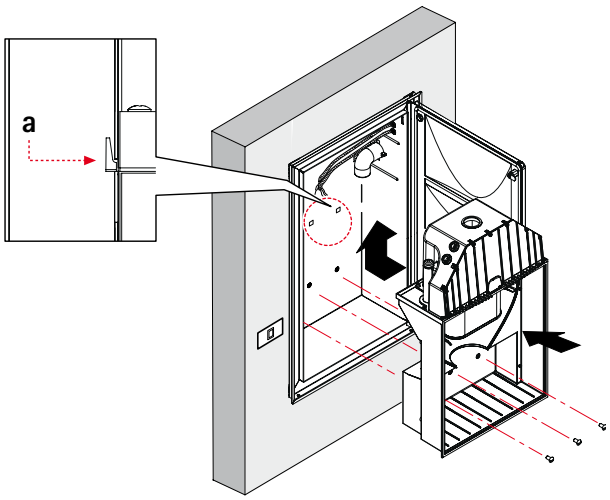

QB INSTALLATION WITH WALL ENCLOSURE

TECHNICAL FEATURES

1 - Box
2 - Door with reversible opening
3 - Central power unit

ARRANGEMENT

The wall box has a total depth of 23.5 cm.
The wall installation is very simple and quick thanks to the fixing brackets and the cabling prepared for the electric connection already inserted in the enclosure.
The QB central power unit reaches degree of electrical protection IP55 with channelled air exhaust and IP45 with air exhaust from the door.

This solution is suitable for outdoor installations.

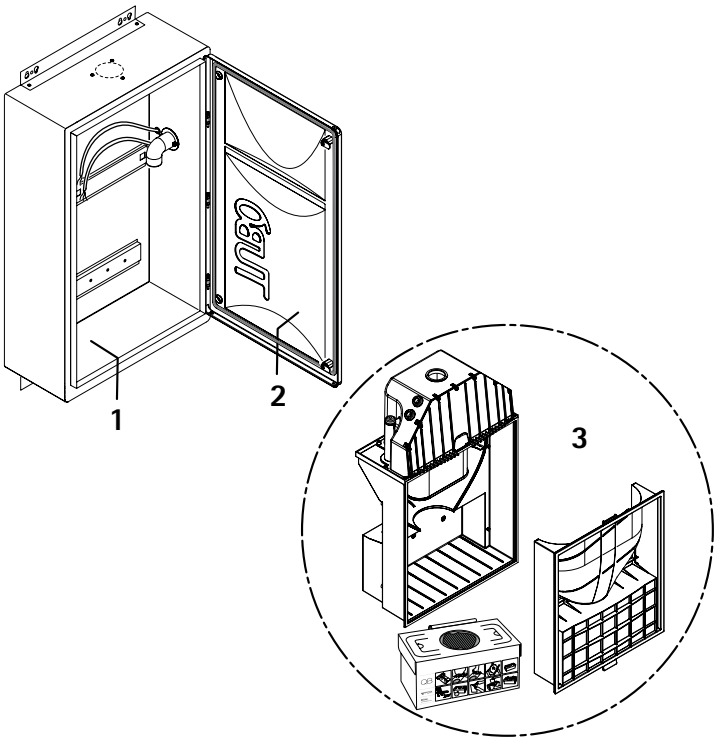

WALL BOX MEASUREMENTS

The measurements of reference (in cm) for the box are provided to the side

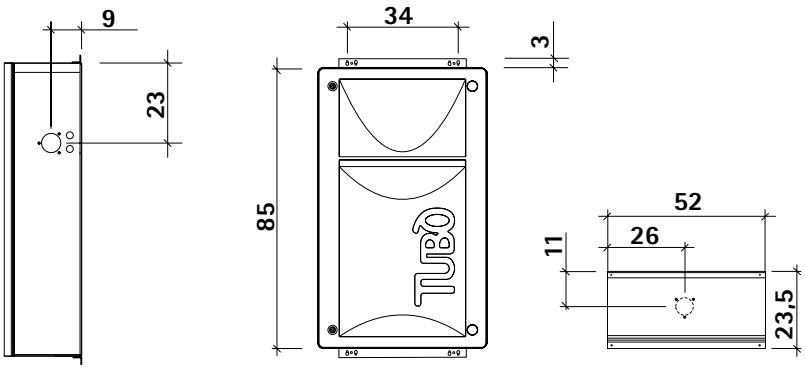

CENTRAL POWER UNIT INSERTION AND FIXING

The installation phase of the central power unit is simple and quick:
insert the central power unit body and hook it into the two holes in the enclosure using the appropriate pivots (A).
The dust inlet fitting will engage in the housing in the central power unit.
Fix the central power unit to the wall enclosure using the appropriate screws.

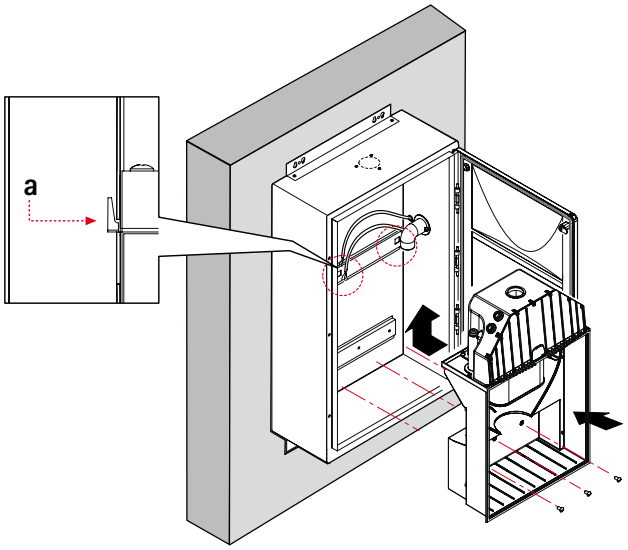

QB CENTRAL POWER UNIT ELECTRIC AND HYDRAULIC CONNECTION

QB CENTRAL POWER UNIT WITH BUILT-IN ENCLOSURE

ELECTRIC AND HYDRAULIC PREPARATION

The following electric connections are made:

1 - connection between the building's electrical line and the central power unit power supply cable
2 - connection of the 12V line to the vacuum sockets
3 - 220/240V line switch
4 - dust inlet fitting
5 - dust inlet line

The QB central power unit can be connected both to the Dynamic Control Display as well as to the REMOTE panel kit.

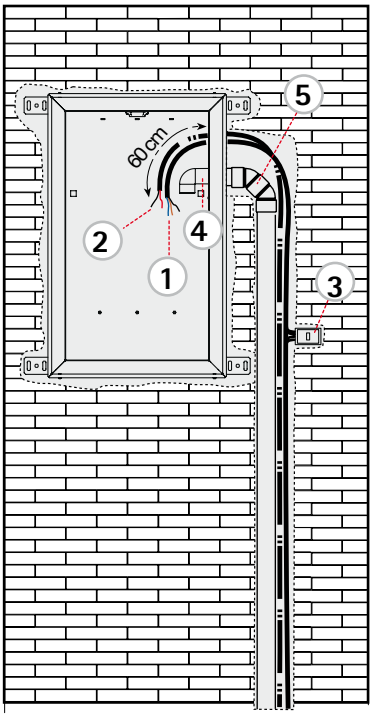

EXPULSION OF CHANNELLED AIR

Recommended for central power units that are located indoors or in closed environments

The aspirated air is released through the union R to be installed in place of the closing cap.
To be ordered separately:
L - Silencer (code CM835)
M - Conical increase adapter (code TR250)
N - Grille (codeTR310)

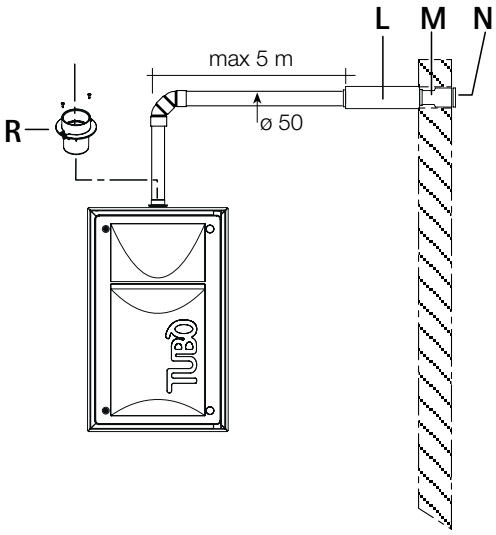

QB CENTRAL POWER UNIT WITH WALL ENCLOSURE

ELECTRICAL PREPARATION

The following electric connections are made:

1 A - schuko electrical socket for 220/240V power supply
2 - electric board for 12V aspiration line sockets
3 - 220/240V line switch/disconnector (only in the case of installation with direct connection to the electrical power supply, without the use of a schuko plug)
H - recommended height from the ground: min 80 cm

The QB central power unit can be connected both to the Dynamic Control Display as well as to the REMOTE panel kit.

NOTE

If the enclosure is installed externally, ensure that an electrical junction box with appropriate electrical protection is used

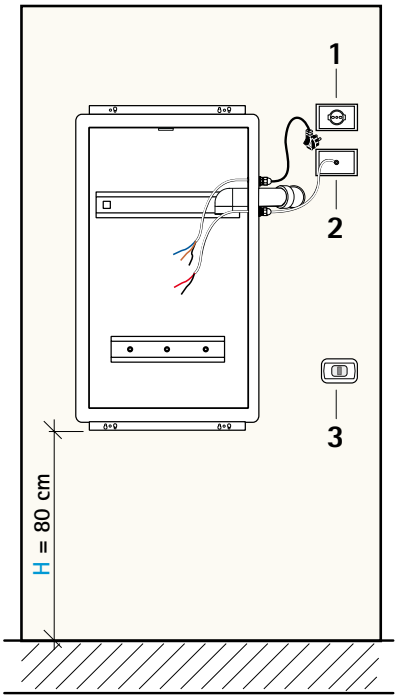

AIR EXPULSION FROM THE DOOR

Recommended for central power units located on a terrace or outside.

The the aspirated air is released through the outlet P prepared in the door.

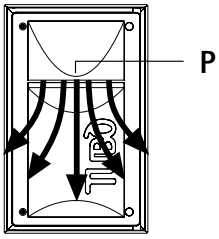

WIRELESS KIT

THE WIRELESS FLEXIBLE HOSE

Is the solution for situations in which the system does not have the electrical preparation or to add a new socket to an already existing system without installing the 12V socket line.

It can be used with all types of vacuum sockets.

RECEIVER

Inside a building, the transmission range between the wireless hose and the receiver is 15 m, which makes it possible to go up or down 2 floors.

1 - wireless hose
2 - receiver
3 - direct connection line to the central power unit

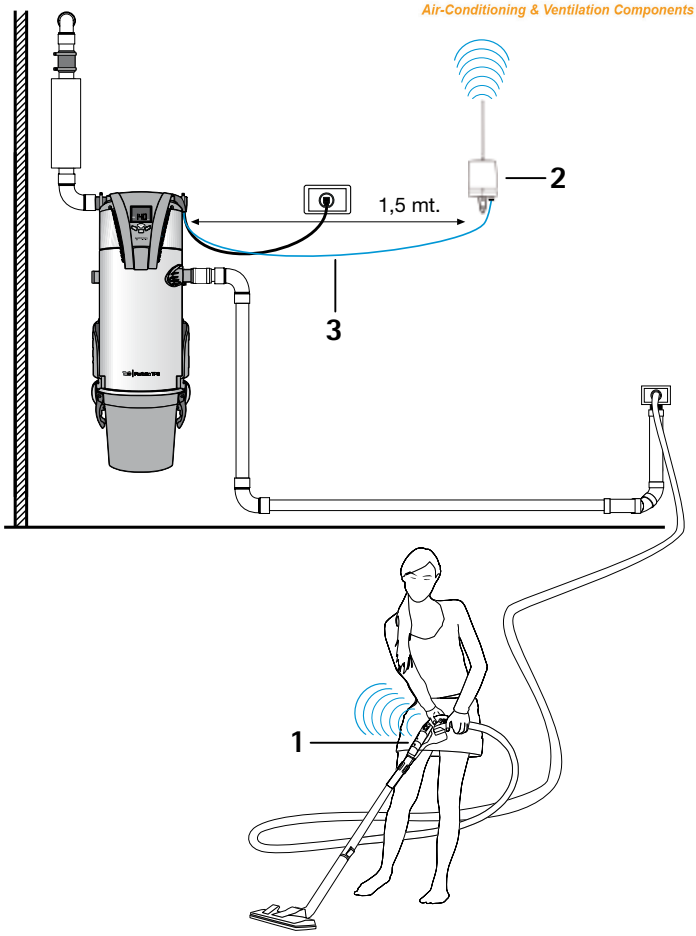

BRAVO VACUUM SYSTEM POWER UNIT

The BRAVO built-in vacuum system power unit was designed to solve space related problems that are found in all types of modern homes with smaller surfaces.
BRAVO is recommended for one-room flats, shops, small offices, bars, garages, etc...

INSTALLATION IN AN EXTERNAL WALL

The built-in vacuum system power unit must be installed in the external wall of the room of installation.
A minimum of a 25 cm diameter, 30 cm deep hole is sufficient for housing the vacuum system power unit.
Its dimensions guarantee the venting of the aspirated air directly outdoors.

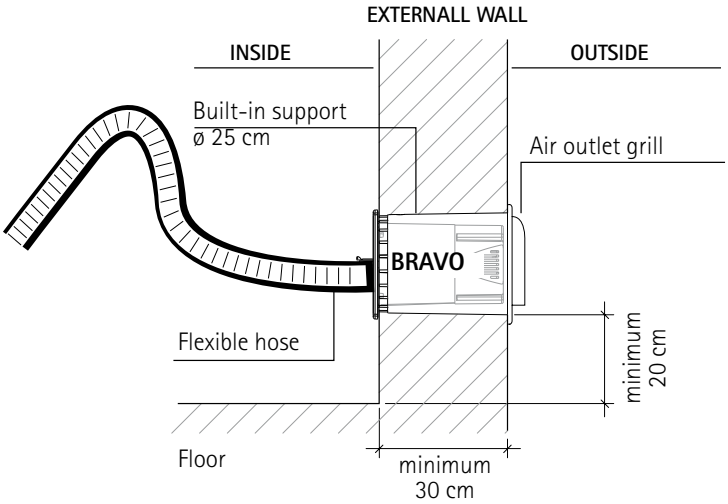

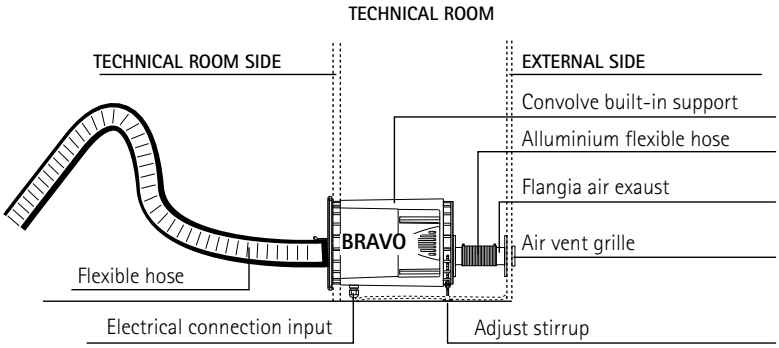

KOMPATTA KT

The KOMPATTA KT line was created to satisfy the requirements of terziary/professional sector to offer a guarantee of absolute reliability, and above all the top swiftness of installation speeding up the product setup and reducing the size.

Main caracteristics are:
1 - engine housing with three-phase motor inside in the upper section;
2 - electric board integrated in the machine frame;
3 - from one to three simultaneous operators;
4 - 4 models with air filter and self-cleaning system;
5 - speed and swiftness of installation;
6 - installation size reduced;
7 - dust container capacity 150 liter.

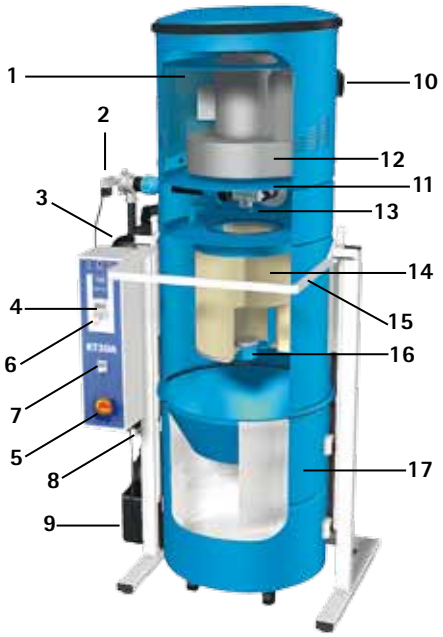

DESCRIPTION OF THE PARTS

1 - Sound proof sponge
2 - Exhaust valve
3 - Compressed air cylinder
4 - Vacuum display
5 - Main switch
6 - Electric panel
7 - Self-cleaning timer
8 - Condensation drain valve
9 - Compressor for air cylinder recharge
10 - Reversible air outlet
11 - Motor support
12 - Turbine motor
13 - Self-cleaning valve
14 - Polyester filter cartridge
15 - Dust container release lever
16 - Fixed nut filter cartridge
17 - Dust container

INSTALLING KOMPATTA KT

1 - Air vent grill
2 - Silencer
3 - Self-cleaning compressor
4 - Supporting feet
5 - Suction manifold
6 - Ball valve
7 - Vertical rising pipe
8 - Orizontal rising pipe
9 - 400V power supply
10 - 12V vacuum sockets line

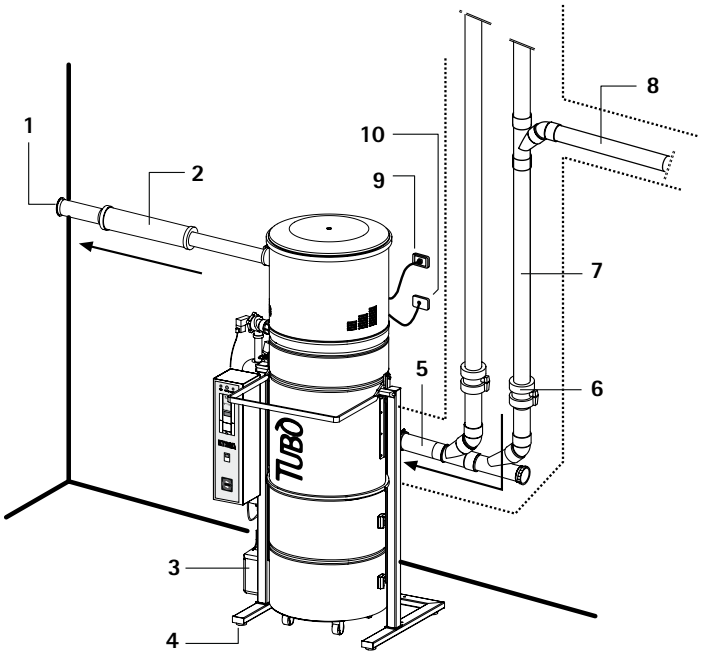

TERTIARY SECTOR

Mixed central vacuum systems
for multi operators

1 - Single-fase power unit
2 - Three-phase power unit
3 - Vacuum sockets
4 - Pipes
5 - False ceiling
6 - Dynamic or Remote panel

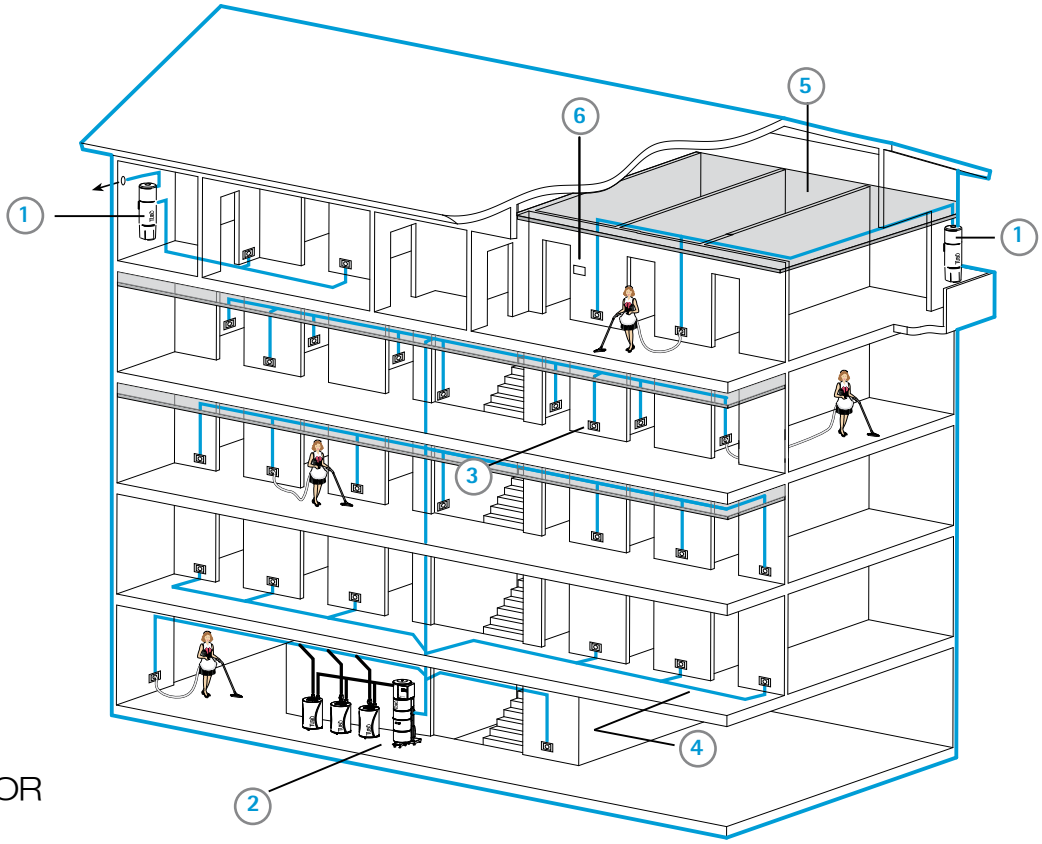

RESIDENTIAL SECTOR

Central vacuum systems
for one operator

1 - Single-fase power unit
3 - Vacuum sockets
4 - Pipes
6 - Dynamic or Remote panel

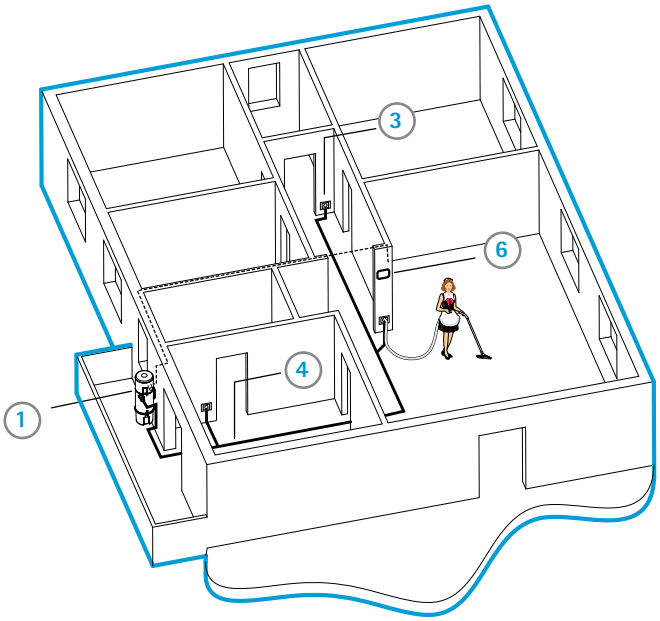

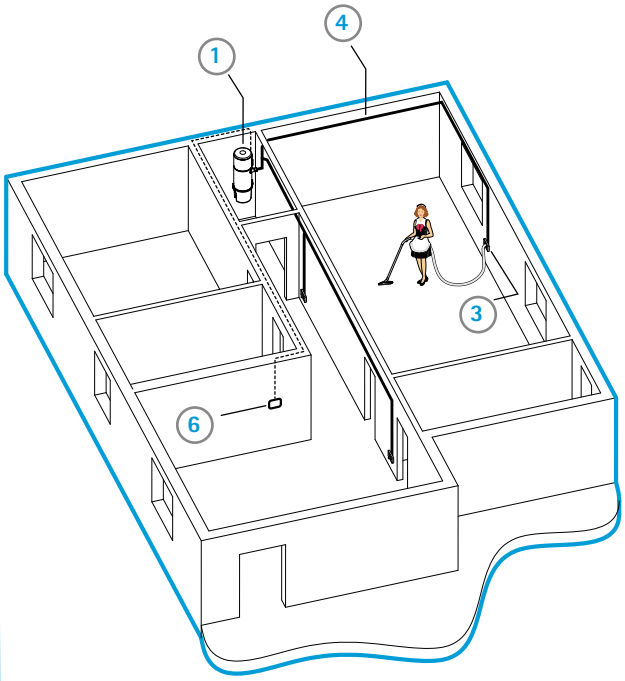

TUBÒ VACUUM SYSTEM INSPECTION

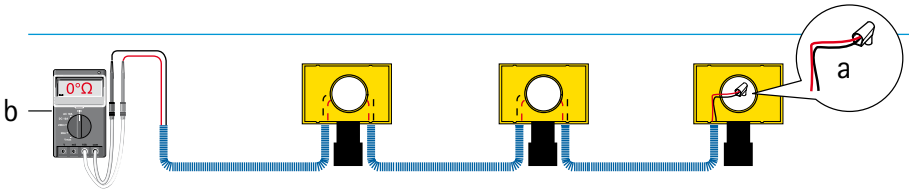

Electric consent inspection

To check the correct position of the activation line, connect the inlet line with the outlet line in parallel on each inlet frame. In the last socket, short circuit the two wires together (A). Connect a tester instrument to the activation line of the central power unit (B), select the function "CONTINUITY" and check that the circuit is ring connected. The value 0 ohm will display on the instrument.

Piping inspection

This check is used to make sure that there are no air leaks in the piping still without sockets and the central power unit.
It must be performed when completing the positioning preparations and repeated before gluing the screed.
Use the TUBÒ system tester kit (AT380) or, if not available, a portable vacuum cleaner, a vacuum gauge to measure the vacuum and a series of caps for inspection.

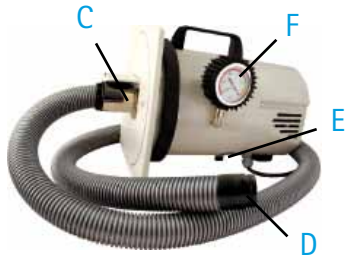

1 - Insert a system tester cap on each inlet frame.
2 - Power the TUBÒ system tester with the flexible hose inserted in the built-in socket (C).
3 - Start the TUBÒ system tester and seal off the other end of the hose with your hand (D). The safety valve (E) must open and the integrated vacuum gauge (F) should read a vacuum value of approx. 150 mbar (VALUE 1). Note the value that appears.
4 - Connect the TUBÒ system tester hose in the dust inlet line arriving from the central power unit and read the vacuum value shown on the vacuum gauge (VALUE 2), which must be similar to the previously written down value 1 (approx. 150 mbar), first checking the opening of the safety valve.

If value 2 is similar to value 1, the inspection is positive.

If the difference between value 1 and value 2 is greater than 15 mbar, this means that there are abnormal leaks in the piping: check with the system in a vacuum where the air leaks are and repair them.

Note

Keep the TUBÒ system tester kit in a vacuum for a maximum continuous period of 5 minutes. If the system tester kit must be used in a vacuum for a longer period of time, remove the flexible hose from the socket in which it is inserted for a minimum of 3 minutes and then reinsert it, restarting the control phase.

General centralised vacuum system inspection

The general centralised vacuum system inspection must be done after the final assembly of all vacuum sockets and the selected central power unit
The detection of the operating vacuum and the features of the central power units differ from each other. It is recommended therefore to follow the specific inspection procedures indicated in the user manual that is provided with each central power unit.

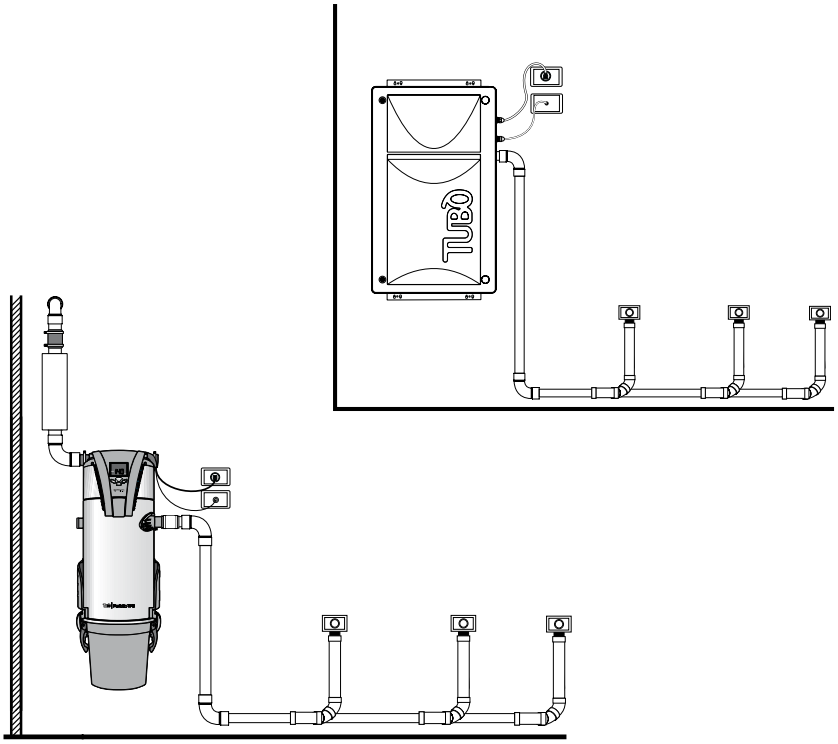

TECHNICAL SPECIFICATIONS - PERFETTO TPA LINE

UPPER SECTION

Motor: housed in a sound-proofed chamber with a low noise emitting internal channelled system.With SOFT START system for gradual starting and motor protection.
Degree of protection : THROUGH FLOW electric motor with an electrical degree of protection of IP55 or IP43 (models TP1A and TP2A). RADIAL electric motor with a degree of protection of IP45 or IP43 (models TP3A and TP4A).
Dual air exhaust: opening on the right side and on the left side with the possibility of choosing the direction of the air exhaust line.
EVOLUTION 1.0 electronic card : supporting the MODBUS protocol and which can be interfaced with the most widely available home automation systems.
AVI Display : (With Immediate Display), displays the central power unit's operating parameters in real time, including:
central power unit's operating time, expressed in hours filter cartridge saturation expressed as a percentage filling level of the dust bag or CLEAN BAG operating vacuum with an indication of the operating range motor chamber temperature.

FILTER SECTION

PRECISION type: washable polyester, with a large filtering surface, with conical centring system, and built-in plastic fastening system.
APF System* filter cartridge self-cleaning system with vibration and self-powered mechanical shaking. The vacuumed air is conveyed in a purpose-provided chamber equipped with a helicoidal turbine. The storage chamber, in glass sphere filled nylon, is situated between the motor compartment and the filter cartridge. The rotation of the helicoidal turbine acts on a shaking pin. The device consists of a steel spring with a rubber half-sphere that rotates on high velocity bearings with dust-proof seal.
The fully mechanical self-cleaning system requires no electrical connections and is always active when the central power unit is in operation; the pressure drops do not exceed 3 mbar. The system is equipped with electronic sensors to detect the vacuum, displaying the power range on the display, signalling any drop in performance due to anomalies and locks the central power unit when the vacuum value exceeds 220 mbar for more than 15 seconds
**APF System (Europe PATENT pending n. 067934216.6)*
Central power unit body : made of a metal structure HOT TREATED WITH EPOXY POLYESTER PAINT, guaranteed and certified for 1,000 hours of salty mist. Cup, Instrument panel with keyboard, Multifunction pockets, Ergonomic handles and Dust container, are made of plastic WITH UV PROTECTION.
Dual dust inlet: opening on the right side and on the left side to facilitate the connection of the dust inlet line with the central power unit.
Service socket : built into the front instrument panel, activated via the START button on the instrument panel.
QUICK FIX fastening bracket: QUICK FIX type, or quick fitting, with front central power unit insertion and fastening kit with antivibration brackets.
Multifunction pockets : to the side of the machine body to house the dust bag and the technical documentation, etc. **(not included in model TP1A)**

DUST CONTAINER

Dust container : with BLOCKING SYSTEM using pressure clips to hook the dust bag onto the bottom of the container, washable, made of plastic.
Ergonomic handles : with SECURING SYSTEM, for safe hooking and unhooking of the dust container and rapid removal of the dust bag, with wide grip to facilitate manual opening, made of plastic.
CLEAN BAG: with built-in string and strip, for immediate and safe closing of the bag without any contact with the dust.
Cone conveyor: Made of plastic, built-in and fixed to the machine body, with strong seal, retains the dust deposited and facilitates dust bag closure.

A - PREPARATION - made with AERTECNICA PVC PIIP/C certified ø 50 mm piping and fittings, cold bonded with self-sealing adhesive, with low voltage 12 Volt electrical line. Preparation buried in the floor and wall.
Cad. €.....x..... Tot. €.....

B - VACUUM SOCKETS - Socket bodies and adapter supports arranged for coupling with the following electrical switch plates: BTICINO brand - models INTERNATIONAL, LIVING, LIGHT, LIGHT TECH, AXOLUTE, MATIX; VIMAR brand - models IDEA, RONDO, PLANA, PLANA SILVER, EIKON, EIKON NEXT; AVE brand - models SISTEMA 45, BANQUISE, SISTEMA 44 GEWISS brand - models PLAYBUS, CHORUS; LEGRAND brand - models VELA, CROSS, MOSAIC; ABB brand - ELOS models.
Cad. €.....x..... Tot. €.....

C - CLEANING ACCESSORIES KIT - Comprising: container for brushes with support for flexible hose and plastic hook for wand, set of dusting brush, crevice nozzle, radiator brush, clothes brush, upholstery brush with felt, chrome-plated wand, 30cm universal brush with floor bristles with castors.
Cad. €.....x..... Tot. €.....

D - FLEXIBLE HOSE - STANDARD type, 9 metres long, ø32 diameter, with pressure regulator. QUICK FLOW type, electrified, 9 metres long, ø32 diameter, with ergonomic grip, with switch for starting the central power unit and pressure regulator. QUICK FLOW WITH SPEED VARIATOR, electrified, 9 metres long, ø32 diameter, with ergonomic grip, with switch for starting the central power unit and speed variator
Cad. €.....x..... Tot. €.....

E - CLEAN BAG - i.e. CLEAN BAG with built-in string and strip, for immediate and safe closing of the bag without any contact with the dust, pack of 5
Cad. €.....x..... Tot. €.....

G - PRECISION FILTER CARTRIDGE - PRECISION type, with high filtering efficiency, made of washable polyester.
Cad. €.....x..... Tot. €.....

LIST OF MATERIAL FOR INSTALLING THE CENTRALISED VACUUM SYSTEM

RESIDENTIAL SECTOR

The following table shows a grid that can be used for general reference in order to have a reliable indication of the quantity of installation material necessary based on the number of vacuum sockets to be installed.
The first column shows the number of vacuum sockets; the row corresponding to the number of vacuum sockets to be installed shows the quantity of the fitting articles and installation material that is required.

	PA012	TR050	TR055	TR051	TR052	TR056	TR210	PE110	CF105	PE410	TR250	TR310	PE309	CF080
sockets point nº	inlet frame n°	pipe ø50 per m.	90° ff elbow Ø50	45°mf elbow Ø50	45°ff elbow Ø50	90°ff offtake Ø50	sleeve with head Ø50	2X1 Ø16 pre-wired 100m	250-g adhesive for PVC	PVC wiring clamps	PVC conical adapter Ø50F/82	Exhaust grille Ø 82	Flush-mounted electric	Wall-mounted bracket
1	1	14	2	2	2	0	2	10	1	5	1	1	1	1
2	2	14	3	4	4	2	4	25	1	15	1	1	1	1
3	3	20	4	6	6	3	8	25	1	15	1	1	1	1
4	4	26	5	7	7	4	9	30	1	20	1	1	1	1
5	5	34	7	8	8	5	10	50	1	30	1	1	1	1
6	6	40	8	10	10	6	11	60	1	30	1	1	1	1
7	7	48	10	12	12	7	12	75	1	35	1	1	2	1
8	8	56	12	13	13	8	14	75	1	40	1	1	2	1
9	9	62	12	18	18	8	15	75	2	45	1	1	2	1
10	10	70	14	20	20	9	17	80	2	50	1	1	2	1
11	11	76	15	22	22	10	19	90	2	55	1	1	2	1
12	12	84	16	24	24	11	20	100	2	60	1	1	2	1
13	13	90	18	26	26	12	22	110	3	65	1	1	2	1
14	14	98	19	28	28	13	24	120	3	70	1	1	3	1
15	15	104	20	30	30	14	25	125	3	75	1	1	3	1
16	16	110	22	32	32	15	27	130	3	80	1	1	3	1
17	17	118	23	34	34	16	29	140	3	85	1	1	3	1
18	18	124	24	36	36	17	30	150	3	90	1	1	3	1
19	19	132	26	38	38	18	32	160	4	95	1	1	3	1
20	20	140	27	40	40	19	34	170	4	100	1	1	3	1

NOTE

If the remote devices Dynamic Control Display or the REMOTE panel kit are to be installed, the sheathing 4x1 ø16 code PE130 must be purchased.

AIRTECHNIC
www.airtechnic.gr
Air-Conditioning & Ventilation Components & Systems

Space for Aertecnica's Distributor Stamp

EN

AERTECNICA
think clean

TUBO
the advanced
vacuum system.
www.aertecnica.com

FSC

Μιχαήλ Καραολή 19 143 43, Ν. Χαλκηδόνα, Αθήνα, Τηλ: 211 - 70.55.500 & 210 - 21.30.051, Fax: 210 - 22.23.283